VILLAGE OF NORTH PALM BEACH
COMMUNITY DEVELOPMENT DEPARTMENT

TO: Honorable Mayor and Council

THRU: Andrew D. Lukasik, Village Manager

FROM: Jeremy Hubsch, Community Development Director
Leonard G. Rubin, Village Attorney

DATE: August 13, 2020

SUBJECT: **Ordinances 1st Reading** – Ordinance Amending Village Comprehensive Plan and Ordinance Amending Commercial Land Development Regulations (Implementation of Citizen's Master Plan)

On behalf of the Village Manager, Village Attorney and the consulting team, we are excited to bring forward land development regulations and comprehensive plan updates to the Village Council for adoption. These updates have been underway for several years and are the culmination of a substantial amount of community input and hard work.

Background:

In August 2015, the Village initiated the process to develop a master plan for future infill development and redevelopment within its corporate limits. From January 30, 2016 to February 5, 2016, the Treasure Coast Regional Planning Council conducted a week long economic development and urban design charrette to assist the Village in the creation of the master plan. Over 150 citizens, elected officials, business owners, and staff members participated in the charrette process. The Treasure Coast Regional Planning Council then created "The Village of North Palm Beach Citizens' Master Plan Report" ("the Master Plan"), which was adopted by the Village Council through Resolution 2016-73 on October 27, 2016.

One of the key recommendations of the Master Plan was to Create a Form-Based Code and Design Guidelines to:

- Ensure private redevelopment complements public investments and contributes to realizing the vision of the Master Plan;
- Respond to market forces;
- Establish predictability in the built environment and the approval process;
- Maximize the waterfront; and
- Provide incentives for desired patterns and forms of development.

Form-based codes have become an increasingly popular tool that communities have implemented to facilitate quality development. Since the initial creation of a form-based code during the development of Seaside, Florida in the 1980's, the concept has grown immensely more popular around the state and country. According to the Form-Based Code Institute, "A form-based code is a land development regulation that fosters predictable built results and high-quality public realm by using physical form (rather than separation of uses) as the organizing principle for the code. A form-based code is a

regulation, not a mere guideline, adopted into city, town, or county law." The Master Plan had several recommendations to implement into a form-based code along the Village's commercial corridors, including:

- Allowing (but not requiring) mixed-use development;
- Allowing a market rate density up to 24 du/ac;
- Focusing less on uses and more on the form of development;
- Ensuring a predictable built environment;
- Allowing parking to be replaced by liner buildings in large parking lots;
- Requiring consistent landscape design along the commercial corridors; and
- Streamlining the approval process for development that meets the code.

Process:

Subsequent to the adoption of the Master Plan, the Village retained the renowned firm of Dover, Kohl & Partners, and its consultant, Spikowski Planning Associates, to develop a form-based code for the Village's commercial zoning districts. The process of revising the Village's land development regulations and comprehensive plan officially started in January 2018. The consulting team held its first public workshop in April 2018, followed by seven additional workshops, held between December 2018 and May 2019. The consulting team and Village staff incorporated feedback from the workshops into draft land development regulations and comprehensive plan amendments. A preliminary version of the draft regulations and comprehensive plan amendments were workshopped with the Planning Commission in January 2020 for feedback.

Key Components of the Code:

The consulting team and staff have finalized the draft land development regulations and comprehensive plan amendments and are now ready to move forward for adoption. There are several significant updates to the existing land development regulations and comprehensive plan. Significant changes or updates are identified below:

Creation of the C-MU US-1 mixed use zoning district that will replace the existing C-A commercial zoning district.

The C-MU zoning district creates greater flexibility in the development of the U.S. Highway One corridor while protecting adjacent residential properties and maintaining a "village-scale."

A mixture of uses, especially active uses, are encouraged throughout the corridor. Although individual properties may develop as a single (residential or commercial) use, the code encourages both the vertical and horizontal integration of uses.

The zoning district eliminates a prescriptive Floor Area Ratio (FAR), but restricts buildings to 4 stories, with the opportunity for an additional partial 5th story (limited to 30% of the floor area of the story below). A developer may request a waiver to allow 5 stories on land north of Anchorage Drive North, with the opportunity for an additional partial 6th story. This waiver must be granted by the Village Council.

Existing development will not be considered non-conforming. However, only substantial redevelopment of the property will allow a property owner to use the flexibility within the proposed code (such as the ability to integrate residential into the property or use the less restrictive parking standards).

Creation of the C-NB Northlake Boulevard commercial zoning district to replace the NBOZ overlay district.

The new code incorporates the existing Northlake Boulevard Overlay Zoning (NBOZ) District regulations into the new C-NB zoning district, thereby eliminating any confusion regarding the application of both the NBOZ regulations and the underlying zoning district regulations.

Creation of "key redevelopment sites" that are encouraged to use the Planned Unit Development process to redevelop.

There are three Key Redevelopment Sites within the proposed code: Crystal Cove, Camelot and the IHOP (Shore Court and U.S. Highway One) properties. Additional properties could be added as Key Redevelopment Sites in the future. The Key Redevelopment Sites are subject to additional regulations, and the Code encourages developers to utilize the Planned Unit Development (PUD) process for redevelopment. Approval of a PUD requires review by both the Planning Commission and Village Council.

Creation of building frontage types and form-based development standards for new buildings.

Build-to lines will better integrate buildings and the streetscapes. At a minimum, buildings, canopies, balconies, awnings, and other structural projections must be setback at least eight feet (8') from the face of the curb on U.S. Highway One

Six (6) different building frontage types are identified to be used at various locations throughout the U.S. Highway One corridor. Each building type has different requirements.

The creation of a new landscape code for multi-family, mixed-use, industrial and commercial properties.

The revised landscape code will create consistent landscape standards through commercial zoning districts in the Village, and is intended to provide a greater volume and variety of landscape while encouraging the use of native vegetation.

Renaming of commercial zoning districts.

Amendments to the comprehensive plan to facilitate mixed-use development and provide consistency with revised land development regulations.

The creation of architectural guidelines, which are not mandated, but rather intended to guide the design of commercial redevelopment.

Creating parking standards for properties that redevelop in the new C-MU and C-NB zoning districts.

Parking minimums require less parking than the existing code. Additionally, shared parking is permitted and will reduce the overall minimum parking requirements for mixed-use projects.

Establishment of a path for properties in the C-MU and C-NB to be granted waivers by the Planning Commission during the site plan approval process.

The Planning Commission will review and approve development applications. The Village Council will review applications only if the developer requests a height waiver for a 5th story, or the developer seeks to incorporate special exception uses into the project, or if a property is designated as a Key Redevelopment Site.

Increase in maximum residential density to 24 units per acre in commercial zoning districts.

Uses that are common along U.S. Highway One and Northlake Boulevard will continue, but residential is now a permitted use. A site can contain up to 24 dwelling units per acre in addition to commercial uses. However, with the inclusion of workforce housing units as provided for in the Comprehensive Plan, a site may increase the residential density to 36 dwelling units per acre.

Planning Commission Recommendation:

At the July 7th Planning Commission meeting, consultants from Dover, Kohl & Partners, Spikowski Planning Associates, and Village Staff presented the draft land development regulations and comprehensive plan amendment for a recommendation to the Village Council. The Planning Commission voted unanimously 7-0 to recommend approval of both the land development regulations and comprehensive plan amendment. A draft of the proposed ordinances has been provided along with this report in the agenda packet.

The Planning Commission identified a few issues that require Village Council consideration. Individual members suggested that the Village Council closely review building height and frontage requirements along U.S. Highway One to ensure they promote the desired character as well as the residential density thresholds.

There is no fiscal impact

Recommendation: Village Staff and the Planning Commission recommend approval of Ordinance No. 2020-05 amending the Village's Comprehensive Plan and Ordinance No. 2020-06 amending the Village's Commercial Land Development Regulations.

Attachments:

1. **Ordinance 2020-05 Comprehensive Plan Amendment**
2. **Ordinance 2020-06 Commercial Land Development Regulations**

ORDINANCE NO. 2020-05

AN ORDINANCE OF THE VILLAGE COUNCIL OF THE VILLAGE OF NORTH PALM BEACH, FLORIDA, AMENDING THE VILLAGE OF NORTH PALM BEACH COMPREHENSIVE PLAN TO IMPLEMENT THE CITIZEN'S MASTER PLAN AND ADDRESS THE VILLAGE'S COMMERCIAL CORRIDORS; AMENDING THE FUTURE LAND USE ELEMENT, THE TRANSPORTATION ELEMENT AND THE CAPITAL IMPROVEMENTS ELEMENT; PROVIDING FOR CONFLICTS; PROVIDING FOR SEVERABILITY; AND PROVIDING FOR AN EFFECTIVE DATE.

WHEREAS, the Village wishes to amend its Comprehensive Plan to implement the Citizen's Master Plan Report and address the Village's commercial corridors to facilitate development and redevelopment opportunities; and

WHEREAS, the proposed amendments address the following elements:

A. Amend the Future Land Use Element to promote pedestrian and bicycle activity in the commercial corridors, provide an exemption for floor area rations to implement to the Citizen's Master Plan, promote mixed use development and redevelopment, increase residential density in Commercial designations, eliminate height restrictions (to be addressed in the Zoning Code), and modify the workforce housing density bonus; and

B. Amend the Transportation Element and the Capital Improvements Element to provide exceptions to Level of Service Standards for specified arterial and collector roadways within the Village's corporate limits.

WHEREAS, on July 7, 2020, the Planning Commission, sitting as the Local Planning Agency, conducted a public hearing to review the proposed amendments to the Village Comprehensive Plan and provide a recommendation to the Village Council; and

WHEREAS, having conducted all of the duly advertised public hearings required by Chapter 163, Florida Statutes, the Village Council wishes to amend its Comprehensive Plan and determines that the adoption of this Ordinance is in the interests of the health, safety and welfare of the residents and citizens of the Village of North Palm Beach.

NOW, THEREFORE, BE IT ORDAINED BY THE VILLAGE COUNCIL OF THE VILLAGE OF NORTH PALM BEACH, FLORIDA as follows:

Section 1. The foregoing recitals are ratified as true and correct and are incorporated herein.

Section 2. The Village Council hereby adopts the revisions to the Village of North Palm Comprehensive Plan attached hereto as Composite Exhibit "A" and incorporated herein by reference (additional language underlined and deleted language ~~stricken through~~).

Section 3. All ordinances or parts of ordinances and resolutions or parts of resolutions in conflict herewith are hereby repealed to the extent of such conflict.

Section 4. If any section, paragraph, sentence, clause, phrase or word of this Ordinance is for any reason held by a court of competent jurisdiction to be unconstitutional, inoperative or void, such holding shall not affect the remainder of this Ordinance.

Section 5. This Ordinance shall be effective thirty-one (31) days after the Department of Economic Opportunity notifies the Village that the plan amendment package is complete or, if timely challenged, this Ordinance shall be effective upon entry of a final order by the Department of Economic Opportunity or the Administration Commission determining the adopted amendment to be in compliance.

PLACED ON FIRST READING THIS _____ DAY OF _____, 2020.

PLACED ON SECOND, FINAL READING AND PASSED THIS _____ DAY OF _____, 2020.

(Village Seal) _____

MAYOR

ATTEST:

_____

VILLAGE CLERK

APPROVED AS TO FORM AND
LEGAL SUFFICIENCY:

_____

VILLAGE ATTORNEY

3.0 FUTURE LAND USE ELEMENT

Policy 1.A.4: Land Development regulations adopted to implement this Comprehensive Plan shall be based on and be consistent with the following standards for non-residential land use intensities as indicated below:

a. ***Location*** shall be in accordance with the Future Land Use Map. Commercial uses shall not be permitted within areas designated for residential development on the Future Land Use Map Series;

b. ***Maximum lot coverage*** ratio shall be governed by applicable land development regulations;

c. ***Maximum building height*** shall be governed by applicable land development regulations and shall be consistent with the Village of North Palm Beach Citizens' Master Plan Report, adopted by Resolution 2016-73 on October 27, 2016, and compatible with neighboring land uses; and

d. ***Adequate off-street parking*** and loading facilities.

e. ***Maximum Floor-Area-Ratios*** for non-residential land uses shall be established as follows:

1. ***Commercial, religious, and institutional land uses***: A maximum of 0.70 for mixed-use development and 0.35 for all other non-residential land uses along U.S. Highway No. 1, north of the Parker Bridge; a maximum of 1.10 along U.S. Highway No. 1, from the Parker Bridge, south to Northlake Boulevard; a maximum of 0.70 along U.S. Highway No. 1, south of Northlake Boulevard; and a maximum of 0.70 along Northlake Boulevard and S.R. Alternate A-1-A. The following areas ~~Twin City Mall site~~ shall be exempt from this requirement to implement the 2016 Citizens' Master Plan:
   - The Twin City Mall site, and subject to the latest land development regulations of the C-3 zoning district, which have been was jointly developed by the Village and the Town of Lake Park.
   - The C-MU zoning district along U.S. Highway No. 1, updated in accordance with the Citizens' Master Plan.
   - Other key redevelopment sites that are explicitly identified in the Village's land development regulations to carry out the Citizens' Master Plan.
2. ~~***Public Buildings And Grounds Uses***: A maximum of 0.25.~~
3. ***Educational Uses***: A maximum of 0.15;
4. ~~***Other Public Facilities Uses***: A maximum of 0.30.~~
5. ***Recreation and Open Space Uses***: A maximum of 0.05
6. ***Light Industrial/Business Uses***: A maximum of 0.45.

Policy 1.A.9: In 2020, the Village ~~shall~~ revised its land development regulations and this Comprehensive Plan ~~no later than 2019~~ to implement the provisions and guiding principles of the Village of North Palm Beach Citizens' Master Plan Report, adopted by Resolution 2016-73 on October 27, 2016.

Exhibit "A"

OBJECTIVE 1.B: The Village desires to enhance certain aging commercial corridors that have ~~Mixed-use developments may be permitted through the commercial planned unit development approval process in areas with~~ a Commercial Future Land Use designation~~, as depicted on the Future Land Use Map Series.~~ into walkable and bikeable centers of vibrant activity. Current business uses along these corridors will be supplemented with new residential and mixed-use development as described in Policy 1.B.4.

Policy 1.B.1: The following use and intensity standards shall be used to promote land use efficiency in mixed-use infill and redevelopment activities~~,~~ and determine maximum ~~mixed-use~~ development potential on a given parcel of land:

1. ***Maximum development potential***: Maximum commercial ~~mixed-use~~ development potential is subject to the floor-area limitations established in Policy 1.A.4, subject to the application of the Village's land development regulations.
2. ***Permitted uses***: Permitted uses shall be specified in each zoning district that allows mixed-use development (see Policy 1.B.4). ~~Each mixed-use development must contain a residential component, together with at least one non-residential component consisting of uses authorized in the assigned underlying commercial zoning district, subject to conditions of approval.~~

~~3. ***Mix of uses***: The non-residential component of a mixed-use development must comprise a minimum of 10% the gross floor area. The residential component of a mixed-use development must contain a minimum of 25% of the gross floor area.~~

3. ~~4.~~ ***Residential density***: Dwelling units in Commercial designations ~~The residential component of a mixed-use development~~ shall not exceed a density of 24 ~~12~~ units per acre or as further limited by zoning district regulations. Developments that qualify for the workforce housing density bonus described in Policy 1.B.2 may construct up to 12 additional units per acre).
4. ~~6.~~ ***Height limitations***: ~~With the exception of those properties located along U.S. Highway 1,~~ The maximum height ~~of a mixed-use development~~ shall be limited to that allowed by the underlying commercial or mixed-use zoning district. ~~The maximum height for mixed-use developments with frontage along U.S. Highway 1 is related to the depth of the property, as measured from the U.S. Highway 1 right-of-way, as follows:~~
   - ~~250 feet or less: Maximum height of 2 stories~~
   - ~~Greater than 250 feet to 300 feet: Maximum height of 3 stories~~
   - ~~Greater than 300 feet: Maximum height of 4 stories~~

Policy 1.B.2: Workforce housing density bonus: The maximum residential density of a mixed-use development ~~may~~ shall be increased from ~~12 to~~ 24 to 36 units per acre provided that either: (a) bonus units are constructed on-site; or ~~(2)~~ (b) funding is provided to assist in a~~n~~ workforce ~~affordable~~ housing program in another jurisdiction or an appropriate alternative, as determined by the Village of North Palm Beach. If alternative (a) is selected, 50% of the bonus units shall ~~be affordable~~ qualify for any of the four (4) eligible income group categories based on Average Median Income (AMI) ~~as defined by the~~ set forth in the County's Workforce Housing Program income guidelines. No more than 50% of the workforce housing units shall be in the 120-140% category. If alternative (b) is selected, an amount equal to 5% of the cost of the vertical construction of the bonus units shall be contributed to the Palm Beach County Affordable Housing Trust Fund, or other appropriate alternative, as determined by the Village of North Palm Beach.

Policy 1.B.3: Assisted Living Facilities, as defined in Section 429.02(5) of the Florida Statutes and licensed by the Florida Agency for Health Care Administration may be permitted as mixed-use developments through the commercial planned unit development approval process, or the special exception process if authorized by the Village's land development regulations, subject to the following use and intensity standards:

1. **A mixed-use Assisted Living Facility** shall provide assistance with activities of daily living, as defined in Section 429.02(1) of the Florida Statutes and special care for persons with memory disorders, as regulated by Section 429.178 of the Florida Statutes.
2. **Required uses:** Each mixed-use Assisted Living Facility shall contain a residential component, together with a non-residential component consisting of administrative offices, central kitchen and communal dining facilities, and separate or shared spaces for the provision of medical, recreation, social, religious, and personal services.
3. **Mix of required uses:** The residential component shall comprise a minimum of 50% and the non-residential component shall comprise a maximum of 20% of the gross floor area of a mixed-use Assisted Living Facility.
4. **Maximum floor area:** Maximum mixed-use Assisted Living Facility development potential is subject to the floor-area limitations established in Policy 1.A.4, subject to the application of the Village's land development regulations.
5. **Maximum resident occupancy:** The residential density of a mixed-use Assisted Living Facility may be increased by the Village Council to an equivalent of 24 units per acre. The maximum resident occupancy shall then be determined by multiplying the equivalent residential density by 1.97 residents per unit. Maximum resident occupancy shall be determined on a project-by-project basis based upon an assessment of site

characteristics and the application of Village land development regulations.

6. **Height limitations:** The maximum height of a mixed-use Assisted Living Facility shall be determined by the application of Policy 1.B.1.6.
7. **Waivers** for reductions in minimum dwelling unit size and parking requirements may be requested during the commercial planned unit development or other authorized approval process.

Policy 1.B.4: ~~Specific additional development limitations and conditions on proposed~~ Residential and mixed-use development~~s~~ may be approved in areas with a Commercial Future Land Use designation in order to achieve a mixed-use development pattern. The Village may use any of the following mechanisms to achieve the desired pattern: ~~shall be established, as necessary, by the Village~~

- The mixed-use provisions in the C-MU zoning district along US. Highway No. 1 between Yacht Club Drive and the Earman River, which are intended to evolve that district into a mixed-use development pattern that remains predominately commercial along US Highway No. 1.
- The mixed-use provisions in the C-T zoning district in the southwest portion of the Village.
- ~~Through~~ The commercial planned unit development process in other zoning districts.

Special Policy 5.6: As a means of enhancing the commercial character of the area along Northlake Boulevard through renovation and/or redevelopment, maintain a waiver process ~~the Commercial Planned Unit Development (CPUD) ordinance~~ which may allow~~s~~ proposed projects to depart from the strict interpretations of the Zoning Code if, after review by the Village, it is found that said projects are in compliance with the North Palm Beach Comprehensive Plan and meet standards in the Zoning Code.

Special Policy 5.16: The 0.43 acre lot located at the southwest corner of Prosperity Farms Road and Honey Road (Map 5 of the Future Land Use Map Atlas) shall be assigned a Commercial Future Land Use Map designation in order to support its current use. The current use may be maintained consistent with the provisions of Sections 45-63 (non-conforming uses) and 45-64 (non-conforming structures) of the Village Code; however, any future change in use shall be consistent with those uses permitted in the C-T ~~C-C~~ transitional Commercial District.

Special Policy 5.18: Residential development on the property delineated as "Special Policy 5.18 ~~5.16~~" on Map 3B of the Future Land Use Map Atlas shall be limited to a maximum of 16 residential units.

OBJECTIVE 6: The Village shall encourage infill development and redevelopment along the Northlake Boulevard and U.S. Highway No.1 corridors.

Policy 6.1: Development and redevelopment activities ~~along the Northlake Boulevard corridor shall conform to the requirements of~~ in the Northlake Boulevard Overlay Zone, as illustrated on Figure 3-8, shall conform with the special land development regulations adopted by the Village of North Palm Beach for the Northlake Boulevard corridor as well as the requirements of the Village's Comprehensive Plan and underlying zoning districts.

Policy 6.2: Mixed-use development and redevelopment is encouraged along the U.S. Highway No.1 corridor by the Village through the provisions of the C-MU and C-T and may also be permitted through the commercial planned unit development approval process, consistent with the density and intensity criteria stated in Objective 1.B.

3.5.4 Northlake Boulevard Overlay Zone Map The Northlake Boulevard Overlay Zone is illustrated on Maps 3C and 5 ~~appropriate maps~~ in the Future Land Use Map Atlas. ~~All properties within the overlay zone are illustrated on Maps 3C and 5 of the Future Land Use Map Atlas~~ Development and redevelopment activities are subject to the special land development regulations adopted by the Village of North Palm Beach for the Northlake Boulevard corridor. ~~adopted under the Overlay Zone ordinance.~~

TABLE 3-1
LAND USE CLASSIFICATION SYSTEM

For purposes of the Comprehensive Plan, the following land use classifications, which are applicable to North Palm Beach, are used to describe existing land uses in the Village. The classifications are consistent with those defined in Chapter 9J5, F.A.C. and concurrent with the Village's perception of use.

Residential: Land uses and activities within land areas used predominantly for housing and excluding all tourist accommodations.

Commercial: Land uses and activities within land areas which are predominantly related to the sale, rental and distribution of products and the provision or performance of services. Within the Commercial classification, residential and other uses may also be permitted in accordance with the mixed-use policies of the Comprehensive Plan and the Village's land development regulations.

[remainder of Table 3-1 deleted for brevity]

[the identical changes are being made to Table 1 in the Future Land Use Atlas]

4.0 TRANSPORTATION ELEMENT

Policy 1.2: Consistent with the adopted Palm Beach County traffic performance standards, the Village shall maintain a peak hour Level-Of-Service (LOS) standard of "D" for all Arterial and Collector roadways within the corporate limits, consistent with Article 12, Chapter B of the Palm Beach County Unified Land Development Code (Ref: Table 4-1)~~.~~ with these exceptions:

- Prosperity Farms Road between Northlake Boulevard and Burns Road, which is designated as a Constrained Roadway at a Lower Level of Service (CRALLS) facility (see Figure 4-5, Policies 1.3 and 1.4, and Table 11-1).
- Transportation concurrency exception area(s) that are designated in the comprehensive plans of the Village of North Palm Beach and Palm Beach County.

ORDINANCE NO. 2020-06

AN ORDINANCE OF THE VILLAGE COUNCIL OF THE VILLAGE OF NORTH PALM BEACH, FLORIDA, AMENDING THE VILLAGE'S LAND DEVELOPMENT REGULATIONS; AMENDING CHAPTER 6, "BUILDINGS AND BUILDING REGULATIONS," TO ALLOW ENCROACHMENTS IN EASEMENTS UNDER SPECIFIED CIRCUMSTANCES, MODIFY THE PROCEDURES APPLICABLE TO APPEARANCE REVIEW AND ADOPT A SITE PLAN AND APPEARANCE REVIEW PROCEDURE; AMENDING CHAPTER 17, "LICENSES AND BUSINESS REGULATIONS," TO ALLOW HOME OCCUPATIONS WITHIN SPECIFIED COMMERCIAL DISTRICTS; AMENDING CHAPTER 19, "OFFENSES AND MISCELLANEOUS PROVISIONS," TO REFERENCE MIXED USE ZONING WITHIN THE NOISE REGULATIONS; AMENDING CHAPTER 21, "PLANNING AND DEVELOPMENT," TO PROVIDE PUBLIC NOTICE FOR WAIVERS AND MODIFY PROCEDURAL REQUIREMENTS; AMENDING CHAPTER 27, "TREES AND SHRUBBERY," TO DELETE ARTICLE III, "LANDSCAPING;" AMENDING APPENDIX A, "APPEARANCE PLAN," TO RECOGNIZE CHANGES TO DISTRICT REGULATIONS, ENCOURAGE SPECIFIC ARCHITECTURAL STYLES AND MODIFY THE CRITERIA; AMENDING APPENDIX B (CHAPTER 36), "SUBDIVISIONS," TO REMOVE CONFLICTS WITH NEW ZONING REGULATIONS; AMENDING APPENDIX C (CHAPTER 45), "ZONING," BY: AMENDING ARTICLE I, "IN GENERAL," TO MODIFY THE DEFINITIONS AND CONFLICT PROVISIONS; AMENDING ARTICLE II, "GENERALLY," TO IDENTIFY CHANGES TO THE NAMES OF CERTAIN ZONING DISTRICTS AND THE ELIMINATION OF OTHERS AND MODIFY THE SIMILAR USE AND SPECIAL EXCEPTION PROCEDURES; AMENDING ARTICLE III, "DISTRICT REGULATIONS," BY AMENDING SECTION 45-31 TO CHANGE THE NAME OF THE C-A COMMERCIAL DISTRICT TO THE C-MU US-1 MIXED USE DISTRICT, MODIFY THE REGULATIONS INCLUDING PERMITTED AND SPECIAL EXCEPTION USES AND APPLY SUCH REGULATIONS TO ALL PROPERTIES CURRENTLY ZONED C-A; DELETING SECTION 45-31.1 TO ELIMINATE THE C-B COMMERCIAL DISTRICT; DELETING SECTION 45-2 TO ELIMINATE THE C-1A LIMITED COMMERCIAL DISTRICT; AMENDING SECTION 45-32.1 TO CHANGE THE NAME OF THE C-C TRANSITIONAL COMMERCIAL DISTRICT TO THE C-T TRANSITIONAL COMMERCIAL DISTRICT, MODIFY THE REGULATIONS INCLUDING PERMITTED USES AND APPLY SUCH REGULATIONS TO ALL PROPERTIES CURRENTLY ZONED C-C; AMENDING SECTION 45-33 TO CHANGE THE NAME OF THE C-1 NEIGHBORHOOD COMMERCIAL DISTRICT TO THE C-S SHOPPING DISTRICT, MODIFY THE REGULATIONS INCLUDING PERMITTED AND SPECIAL EXCEPTION USES, AND APPLY SUCH REGULATIONS TO ALL PROPERTIES CURRENTLY ZONED C-1; AMENDING SECTION 45-34 TO CHANGE THE NAME OF THE COMMERCIAL DISTRICT TO THE C-G GENERAL COMMERCIAL DISTRICT, MODIFY THE REGULATIONS AND APPLY SUCH REGULATIONS TO ALL PROPERTIES CURRENTLY ZONED

COMMERCIAL; AMENDING SECTION 45-35.1 TO MODIFY THE REGULATIONS APPLICABLE TO PLANNED UNIT DEVELOPMENTS; AMENDING SECTION 45-35.2 TO RENAME THE C-OS CONSERVATION AND OPEN SPACE DISTRICT TO THE OS CONSERVATION AND OPEN SPACE DISTRICT; AMENDING SECTION 45-35.3 TO ELIMINATE THE NORTHLAKE BOULEVARD OVERLAY ZONING DISTRICT AND CREATE A NEW C-NB NORTHLAKE BOULEVARD COMMERCIAL DISTRICT AND MODIFY THE REGULATIONS INCLUDING PERMITTED AND SPECIAL EXCEPTION USES; AMENDING SECTION 45-36 TO REVISE THE OFF-STREET PARKING REGULATIONS, THE HEIGHT REGULATIONS AND THE OUTDOOR SEATING REGULATIONS; AMENDING SECTION 45-38 TO MODIFY THE I-1 LIGHT INDUSTRIAL ZONING REGULATIONS RELATING TO OUTDOOR RUNS AND DOG EXERCISE AREAS; RENAMING ARTICLE VI, "AMENDMENTS—FEES; WAITING PERIODS," TO "REZONINGS; VARIANCES; WAIVERS," AND MODIFYING THE REGULATIONS APPLICABLE TO REZONINGS AND VARIANCES AND ADOPTING NEW REGULATIONS FOR WAIVERS WITHIN THE C-MU AND C-NB ZONING DISTRICTS; AMENDING ARTICLE VII, "NON-CONFORMING USES OF LAND AND STRUCTURES," TO ALLOW THE EXTENSION AND ENLARGEMENT OF NON-CONFORMING USES AND STRUCTURES UNDER SPECIFIED CIRCUMSTANCES; AND ADOPTING A NEW ARTICLE VIII, "LANDSCAPING," TO MODIFY AND UPDATE THE CURRENT LANDSCAPING REQUIREMENTS FOR MULTI-FAMILY, MIXED USE, COMMERCIAL AND INDUSTRIAL DEVELOPMENTS; UPDATING CROSS-REFERENCES; PROVIDING FOR CODIFICATION; PROVIDING FOR SEVERABILITY; PROVIDING FOR CONFLICTS; PROVIDING FOR AN EFFECTIVE DATE; AND FOR OTHER PURPOSES.

WHEREAS, in August 2015, the Village contracted with the Treasure Coast Regional Planning Council ("TCRPC") to develop a master plan for future infill development and redevelopment within its corporate limits, as well as a community-based vision for economic growth; and

WHEREAS, from January 30, 2016 through February 5, 2016, TCRPC conducted a week-long economic development and urban design charrette to assist the Village in accomplishing its goals; and

WHEREAS, working with members of the public and other interested parties, TCRPC created its report, and through the adoption of Resolution No. 2016-73 on October 27, 2016, the Village Council formally adopted "The Village of North Palm Beach Citizens' Master Plan Report dated October 20, 2016" prepared by the TCRPC, including the recommendations contained therein, as setting forth the guiding principles for future development within the Village; and

WHEREAS, one of the Master Plan's key recommendations is to develop a form-based code for the Village's commercial corridors, and the Village retained the firm of Dover, Kohl & Partners, and its consultant, Spikowski Planning Associates, to develop the form-based code for the Village's commercial zoning districts and

WHEREAS, the Village Council wishes to amend its land development regulations to adopt the form-based code prepared by the Village's consultants, in addition to certain other revisions recommended by Village residents, Village Staff, and the Village's advisory boards; and

WHEREAS, on July 7, 2020, the Planning Commission, sitting as the Local Planning Agency, conducted a public hearing to review this Ordinance and provide a recommendation to the Village Council; and

WHEREAS, having considered the recommendation of the Planning Commission and conducted all required advertised public hearings, the Village Council determines that the adoption of this Ordinance is in the interests of the health, safety and welfare of the residents and citizens of the Village of North Palm Beach.

NOW, THEREFORE, BE IT ORDAINED BY THE VILLAGE COUNCIL OF THE VILLAGE OF NORTH PALM BEACH, FLORIDA as follows:

Section 1. The foregoing recitals are ratified as true and correct and are incorporated herein.

Section 2. The Village Council hereby amends Chapter 6, "Buildings and Building Regulations," of the Village Code of Ordinances to read as follows (additional language is underlined and deleted language is ~~stricken through~~):

ARTICLE I. IN GENERAL.

Sec. 6-1. Construction on public land prohibited.

It shall be unlawful for any person to erect or maintain, or to permit the erection or maintenance of any structure of any kind, including a wall upon, across, over or under any portion of any publicly dedicated utility or drainage easement area in the village unless the person has received the approval of and/or executed encroachment agreements with all easement holders and received approval from the village. This prohibition does not apply to sidewalks or paths of any kind that are lawfully placed under overhead wires.

* * *

ARTICLE III. APPEARANCE CODE.

DIVISION 1. GENERALLY.

Sec. 6-30. Short title.

This article, including any regulation hereafter adopted, shall hereafter be known, cited and referred to as the "Appearance Code."

Sec. 6-31. Definition.

The term "external architectural feature" is defined to mean the architectural style, color and general arrangement of such portion of a building or structure,

including signs and accessory structures, as is designed to be open to view from a public street, place or way, or from adjoining premises.

Sec. 6-32. Intent and purposes.

This appearance code is adopted for the following purposes:

(1) To promote the public health, safety, morals, comfort and general welfare of the citizens of the village.

(2) To enhance the values of property throughout the village.

(3) To protect and to stabilize the general appearance of public and private buildings, structures, landscaping, and open areas, in the ~~multiple dwelling, commercial and public zoning districts of the~~ village.

(4) To ensure ~~insure~~ adequate light, air and privacy for property in the ~~multiple dwelling, commercial and public zoning districts of the~~ village.

(5) To ~~encourage and~~ promote acceptability, attractiveness, cohesiveness and compatibility of new buildings, developments, remodeling and additions so as to maintain and improve the established standards ~~of property values within the~~ for multiple-dwelling, commercial, mixed-use, and industrial buildings. ~~and public zoning districts of the village.~~

Sec. 6-33. Appearance plan.

The village hereby adopts by reference thereto the appearance plan attached as exhibit A to Ordinance No. 3-72 of the village. The appearance plan is set forth at length in Appendix A of this Code. The appearance plan will be applied through the site plan and appearance review process described in this chapter.

Sec. 6-34. Reserved.

Sec. 6-35. Appeals and review.

The applicant or any interested party may file an appeal to the village council on any final ruling by the planning commission made pursuant to this article. An appeal shall be on forms provided by the village. The appeal shall be filed or made within ten (10) days after decision of the planning commission. Appeals shall set forth the alleged inconsistency or nonconformity with procedures or criteria set forth in this article or standards set forth in or pursuant to this article. Appeals filed pursuant to this section shall be based solely on the record of the proceedings before the planning commission and the village council shall not conduct a de novo review. The village council shall decide an appeal within ~~thirty (30)~~ forty-five (45) days of the filing of such appeal unless an extension of time is consented to by the applicant, and such filing shall suspend any building permit issued pursuant to the ruling of the planning commission until the village council has decided the appeal.

The village council may review any decision of the planning commission issued pursuant to this article and the~~ir~~ council's disposition of the matter shall be final.

Sec. 6-36. Powers and duties of planning commission concerning the appearance code.

The planning commission shall have the following powers and duties:

(1) To hold public hearings on and make recommendations for amendments to the appearance plan.

(2) To consult with and cooperate with ~~the planning and zoning advisory board, the beautification committee and~~ other committees and village departments, and any other municipal or governmental bodies, on matters affecting the appearance of the village.

(3) To study exterior design drawings, landscape and site plans and materials for any proposed public buildings, public works, or other public improvements and to make recommendations to the council or village manager as to the architectural or aesthetic aspects thereof.

(4) To study and review preliminary and final plats and make recommendations to ~~the planning and zoning advisory board and~~ the village council.

(5) To hold site plan and appearance review hearings, when required, ~~on the issuance of certificates of appropriateness as provided in section 6-59, in connection with questions pertaining to applications for building permits~~ and to issue or deny site plan and appearance approval for multiple-dwelling, commercial, mixed-use, and industrial buildings ~~such certificates~~ pursuant to the provisions of this division and the appearance plan in Appendix A of this code. ~~such section 6-59.~~

* * *

DIVISION 3. SITE PLAN AND APPEARANCE REVIEW ~~CERTIFICATE OF APPROPRIATENESS~~

Sec. 6-56. Application requirements. ~~Preliminary consideration.~~

Applications for site plan and/or appearance review must include sufficient information to demonstrate compliance with all village requirements. Plans must be professionally prepared and drawn to scale with accurate dimensions, and must include the following unless waived by the community development director:

(1) The application must be signed by the landowner, or must include a statement signed by an agent, under oath, indicating authorization by the owner(s) to secure site plan and appearance approval.

(2) A boundary sketch including the total area, dimensions, and legal description for the property. The community development director may require a survey if deemed necessary to facilitate review of the application.

(3) A site plan showing all proposed improvements, including not limited to, existing and proposed parking spaces, access aisles, driveways, and access points to external streets or adjoining properties. The plan shall show the existing structures and all proposed development, with sufficient detail as to the size and appearance of all structures and improvements to indicate compliance with all village requirements and regulations, including the appearance plan. The plans shall also show all structures within two hundred (200) feet of the property.

(4) Conceptual civil plans showing proposed changes affecting drainage and utilities. Final civil plans shall be provided during the permitting process.

(5) Elevations or renderings of proposed structures and landscaping as required by the community development department.

(6) Landscape plans that comply with section 45-86.

(7) Photometric plans as required by the community development department.

(8) Written narrative explaining the proposed development and its consistency with the village appearance plan, village code, and village comprehensive plan.

(9) Other relevant information as requested by the community development department.

~~The planning commission shall, at the written request of a prospective applicant for a certificate of appropriateness, give consideration to preliminary exterior drawings, sketches, landscape and site plans and materials on a specific project before a formal application is filed, and shall provide such advice, counsel, suggestions and recommendations on matters pertaining to aesthetics as they may deem necessary to guide such prospective applicant in the development of a plan which would comply with the requirements and purposes of the appearance plan; except that the planning commission shall act in an advisory capacity only, with regard to preliminary plans, and shall provide consultation only on projects for which preliminary drawings and materials are furnished by such prospective applicant, and shall not participate in the development of the basic concept, plans or drawings. Upon finding the preliminary exterior drawings, sketches, landscape and site plans and materials are appropriate to, or compatible with, the character of the immediate neighborhood and will tend to effect the general purposes of the appearance plan, the board will issue a preliminary approval. Such approval will be irrevocable, and makes the issuance of the certificate of appropriateness mandatory~~

~~upon application, unless the final presentation does not comply in all respects with the preliminary presentation upon which the preliminary approval was based.~~

Sec. 6-57. ~~Final~~ Site Plan and Appearance Hearings.

Upon filing of a~~n~~ complete application for site plan and appearance approval ~~building permit~~ for a multifamily, ~~or~~ commercial, mixed-use, or industrial building or structure, the community development department shall schedule the application for a hearing before the planning commission. ~~The fact that an application for a certificate of appropriateness has been filed shall not be cause for the community development department to delay the review of plans relating to the building and zoning aspects of the project, while the application is pending.~~ The planning commission shall establish regularly scheduled ~~monthly~~ meetings at which to review all site plan and appearance applications. ~~Applications shall be submitted at least fourteen (14) days prior to the scheduled monthly meetings, or as otherwise determined by the community development director, in order to be considered at that scheduled monthly meeting. The community development department shall prepare an agenda containing a list of all applications filed for each scheduled monthly meeting, which shall be submitted to all members of the planning commission at least five (5) days prior to the scheduled monthly meetings.~~ The community development department shall ~~further~~ notify each applicant of the date and time of a hearing on his application, ~~in writing, which notice shall be mailed at least five (5) days prior to such hearing~~. If the application includes a request for a special exception (section 45-16.2), variance (section 45-50), or waiver (section 45-51), the hearing shall be considered a formal public hearing and notice shall be provided in accordance with section 21-3. Upon such hearing, the planning commission shall consider the application for ~~building permit~~ site plan and appearance approval and any related requests for special exceptions, variances, or waivers and may review ~~receive~~ additional evidence (such as the exterior renderings) from the applicant or his agent or attorney. The planning commission shall consider reports and testimony ~~and~~ from village staff, the applicant, and ~~or~~ other persons as to whether the site plan and external architectural features of the proposed building or structure comply with the appearance plan and meet relevant village land development regulations.

Sec. 6-58. Action of planning commission.

Upon consideration of an application, the planning commission shall issue site plan and appearance approval ~~a certificate of appropriateness to the community development department~~ upon a finding that the plan conforms to the village appearance plan and other relevant land development regulations. This approval may contain special conditions in response to unusual aspects of the application or to ensure that the approval carries out village policies and codes without undue permitting delays. ~~and that the proposed building or structure is appropriate to, and compatible with, the character of the immediate neighborhood and will not cause a substantial depreciation in property values.~~ If the planning commission determines that these criteria are not met, the planning commission may ~~shall~~ provide such advice, counsel, suggestions and recommendations ~~on matters pertaining to aesthetics~~ as it may deem necessary to guide the prospective applicant in the

development of a plan which would comply with the requirements and purposes of the appearance plan and other village land development regulations. ~~If preliminary hearings have been held on the project for which application is being made, and preliminary approval has been issued by the planning commission as provided in section 6-56, the planning commission shall issue a certificate of appropriateness immediately, provided that the final drawings, plans and material as presented comply in all respects with the preliminary presentation upon which the preliminary approval was based.~~

Sec. 6-59. Approval by planning commission.

~~The planning commission shall issue a certificate of appropriateness upon a concurring vote of at least three (3) members.~~ No building or other permit~~,~~ otherwise required under the ordinances of the village~~, for the erection, construction, alteration or repair of any building or structure in a multiple-dwelling, commercial or public zoning district~~ shall be approved by the community development director except upon the granting of site plan and appearance approval ~~a certificate of appropriateness~~ by the planning commission, or on appeal, granted by the village council (see section 6-35). The foregoing requirements shall not preclude the issuance of ~~a building~~ permits without such approval ~~certificate~~ if the community development director ~~shall~~ determines that any of the following apply:

(1) The permits are for a single-family dwelling and/or normal accessory buildings or structures on the same lot; or

(2) The permits are for a village-owned facility; or

(3) No external architectural feature as defined in section 6-31 is involved in the work for which the ~~building~~ permit is sought, and the proposed work would be in full compliance with all requirements of this code; or~~.~~

(4) Any deviations from a valid site plan and appearance approval are minor and not substantial or had been authorized by conditions placed on the site plan and appearance approval. Unless authorized by prior conditions, the following types of deviations may never be considered minor or not substantial: increasing residential density; increasing the horizontal or vertical size of a building; and/or adding land uses that had previously been excluded. The director must document any such determination with an explanation of why is was deemed minor or had been authorized. The director must forward this determination to the planning commission, and also to the village council if the site plan and appearance approval had been appealed to the village council.

Sec. 6-60. Follow-up by community development department.

Upon the granting of site plan and appearance approval, ~~a certificate of appropriateness,~~ the community development director will retain the exterior drawings, sketches, landscape and site plans, renderings and materials upon which such approval ~~certificate~~ was granted ~~shall be turned over to the community~~

~~development department whose responsibility it shall be~~ to determine, from time to time as the project is in progress and finally upon its completion, that there have been no unauthorized deviations from the evidence upon which the granting of the approval ~~certificate of appropriateness~~ was originally based. The community development department shall not issue a certificate of occupancy or final inspection approval for any building or structure where there have been any unauthorized deviations from the site plan and appearance approval.

Section 3. The Village Council hereby amends Chapter 17, "Licenses and Miscellaneous Business Regulations," of the Village Code of Ordinances by amending Article I to read as follows (additional language is underlined and deleted language is ~~stricken through~~):

ARTICLE I. IN GENERAL

* * *

Sec. 17-3. Home occupations.

(a) *Home occupations as permitted uses.* Home occupations shall be permitted uses within R-1 Single-family Dwelling District, R-2 Multiple-family Dwelling District, ~~and~~ R-3 Apartment Dwelling District, C-MU and C-3 mixed-use districts, and mixed-use Residential/Commercial PUDs.

Section 4. The Village Council hereby amends Chapter 19, "Offenses and Miscellaneous Provisions," of the Village Code of Ordinances by amending Article VI to read as follows (additional language is underlined and deleted language is ~~stricken through~~):

ARTICLE VI. NOISE CONTROL

Sec. 19-99. Definitions.

For the purposes of this article, whenever any of the following words, terms or definitions are used herein they shall have the meanings ascribed to them in this section except where the context requires otherwise:

* * *

Unreasonable noise means any noise in or emanating from any property located within the corporate limits of village which violates the provisions of this article.

(a) For noise emanating from property with a *commercial, mixed-use, or light industrial zoning designation*, unreasonable noise shall be defined as any noise emanating from the property which equals or excess a measured sound level of sixty-five (65) dBA between the hours of 10:00 p.m. and 8:00 a.m. Sunday through Thursday, a measured sound level in excess of eighty-five (85) dBA between the hours of 8:00 a.m. and

10:00 p.m. Sunday through Thursday; and a measured sound level which equals or exceeds sixty-five (65) dBA between the hours of 11:00 p.m. and 8:00 a.m. Friday through Saturday and a measured sound level meeting or exceeding eighty-five (85) dBA between the hours of 8:00 a.m. and 11:00 p.m. Friday through Saturday.

(b) For noise emanating from property with a *commercial, mixed-use, or light industrial zoning designation* which shares any portion of its boundary with a property with a residential zoning designation, unreasonable noise shall be defined as any noise emanating from the property which equals or exceeds a measured sound level of sixty (60) dBA between the hours of 10:00 p.m. and 8:00 a.m. Sunday through Thursday, a measured sound level in excess of seventy (70) dBA between the hours of 8:00 a.m. and 10:00 p.m. Sunday through Thursday; and a measured sound level which equals or exceeds sixty (60) dBA between the hours of 11:00 p.m. and 8:00 a.m. Friday through Saturday and a measured sound level meeting or exceeding seventy (70) dBA between the hours of 8:00 a.m. and 11:00 p.m. Friday through Saturday.

(c) For noise emanating from property with a *residential zoning designation*, unreasonable noise shall be defined as noise that is plainly audible one hundred and fifty (150) feet from the property boundary of the source of the sound or noise, measured on a horizontal plane. Notwithstanding the foregoing, noise shall be considered unreasonable when it is plainly audible through the external walls and fully closed windows and doors of a residential structure or through walls, floors or partitions common to two (2) residential units located within a single structure.

(d) Noise shall be measured from the property boundary closest to the source of noise with a sixty (60) second reading. Where the property boundary abuts a waterway, the property boundary shall be considered the opposite side of the waterway and not the actual seawall or bulkhead.

Section 5. The Village Council hereby amends Chapter 21, "Planning and Development," of the Village Code of Ordinances to read as follows (additional language is underlined and deleted language is ~~stricken through~~):

ARTICLE I. IN GENERAL

* * *

Sec. 21-3. Public notice requirements for development applications and approvals.

(a) ***Requirements***. In addition to those requirements imposed by state law, public notice shall be provided as set forth below:

	Planning Commission/LPA/ Zoning Board of Adjustment			Village Council		
	Mail*	News-paper*	Post*	Mail*	Newspaper	Post*
Rezoning	10	7	15	10	Statutory notice for ordinance adoption	15
Large-scale Comprehensive Plan Amendment	10	7	15	10	Statutory notice for ordinance adoption	15
Small-scale Comprehensive Plan Amendment	10	7	15	10	Statutory notice for ordinance adoption	15
Variance**	7	7	10	N/A	N/A	N/A
Waiver***	7	7	10	10	7	15
Planned Unit Development	10	7	15	10	Statutory notice for ordinance adoption	15
Special Exception Use	7 ~~10~~	7	10 ~~15~~	10	Notice of public hearing 7 days prior to hearing or statutory notice for ordinance adoption (if within a PUD)	15

* Number of calendar days prior to date of the first required public hearing.

** The notice requirements for variances shall include all variances relating to the zoning code (Chapter 45), the dock and waterway regulations (Chapter 5), and the sign regulations (Chapter 6).

*** The notice requirements for waivers shall apply only to waivers requested pursuant to section 45-51 (Chapter 45).

(b) ***Mailing requirements.***

(1) ***Contents***. Unless otherwise required herein, mail notice of a public hearing shall contain the following information:

a. Title and substance of proposed ordinance or development order;

b. Time, date and location of the public hearing;

c. Location of the property affected by the application with reference to the nearest intersection of two (2) or more streets;

d. Name, address and telephone number of the office where additional information can be obtained; and

e. Location and times where proposed ordinance or development order application may be reviewed.

(2) All notices shall be provided by first-class mail, unless otherwise required by community development director. Mail notice shall be postmarked no later than the minimum number of calendar days as required in subsection (a) above.

(3) Mail for all privately initiated applications shall be provided to all property owners of record, excluding property owned by the applicant, within five hundred (500) feet of the property to which the development order application or amendment relates.

(4) The list of property owners shall be derived from the most recent official tax roll of Palm Beach County. The applicant shall provide an affidavit attesting to the completeness and accuracy of the property owner's list.

(5) The applicant shall provide and mail all required notices, and provide an affidavit that notice was sent to all property owners included in the property owner's list.

(c) ***Posting requirements.***

(1) The applicant shall provide the signs, subject to the criteria for size and contents established by the community development director.

(2) The applicant shall install the signs in a workmanlike manner. All signs should be installed so as to withstand normal weather events.

(3) The applicant shall post one (1) sign per five hundred (500) feet of lineal right-of-way, with a minimum of one (1) sign per frontage.

(4) The applicant shall provide, at least three (3) days prior to the public hearing, a photograph of the sign and an affidavit attesting to the date of installation and the number of signs.

(d) ***Newspaper requirements***. The applicant shall be responsible for all costs associated with newspaper advertisements.

ARTICLE II. PLANNING COMMISSION

Sec. 21-11. Composition; conduct generally.

* * *

(d) ***Powers, duties***. The planning commission shall have the following powers and duties:

(1) Perform any duties which lawfully may be assigned to it by the village council.

(2) Perform any other duties which may be assigned to it under this Code.

(3) The planning commission of the village is hereby designated as the governmental entity to act as the "local planning agency" in accordance with chapter 163, Florida Statutes.

(4) The planning commission shall serve as the village's board of adjustment to consider variances and administrative appeals.

(5) The planning commission has additional duties that include site plan and appearance review (see sections 6-30 through 6-60); the responsibility to make recommendations on special exceptions (see section 45-16.2); and the authority to approve waivers on land in the C-MU and C-NB zoning districts only (see section 45-51).

Sec. 21-12. - Changes to zoning ordinances.

(a) The village council may amend or supplement the regulations and districts established by this code after receiving ~~fixed by any zoning ordinance adopted pursuant to this act (Local Government Comprehensive Planning and Land Development Regulation Act) after referral and~~ the recommendations of the planning commission. Proposed changes may be suggested by the village council or the village manager. Changes to zoning district boundaries may be requested in accordance with section 45-49. ~~, by the planning commission, or by the petition of the owners of fifty-one (51) percent or more of the area involved in the proposed change. In the latter case, the petitioners may be required to assume the cost of public notice and other costs incidental to the holding of public hearings.~~

(b) The planning commission, regardless of the source of the proposed change, shall hold a public hearing or hearings thereon, with due public notice, but shall in any case, if any change is to be considered by the planning commission, submit in writing its recommendations on the proposed change to the village council for official action. The village council shall hold a public hearing thereon, with due public notice, if any change is to be considered and shall then act on the proposed change. If the recommendation of the planning commission is adverse to the proposed change, such change shall not become effective except by an affirmative vote of a majority of the entire membership of the village council, after due public notice.

Section 6. The Village Council hereby amends Chapter 27, "Trees and Shrubbery," of the Village Code of Ordinances to delete Article III, "Landscaping," in its entirety and amend Article II, "Trees in Swale Areas," as follows (additional language is underlined and deleted language is ~~stricken through~~):

* * *

Sec. 27-18. Variety and location.

* * *

(b) Swale trees shall be planted so as not to impede the flow and storage of storm water. Swale trees shall be planted and maintained to provide safe sight distances in accordance with section ~~27-66~~ 45-90.C. Incidental plantings of flowers may be planted and maintained without permit subject to the same criteria described herein.

* * *

Section 7. The Village Council hereby amends Appendix A, "Appearance Plan," of the Village Code of Ordinances to read as follows (additional language is underlined and deleted language is ~~stricken through~~):

* * *

SECTION I – BASIS FOR THE APPEARANCE PLAN

The North Palm Beach Village Council adopted an Appearance ~~Code,~~ Ordinance, Number 4-71, on May 27, 1971. This Ordinance provided for the appointment of an Appearance Board which would concern itself with and act in matters affecting the physical appearance of designated areas.

The Board was empowered to develop an Appearance Plan to serve as standards or guidelines for physical developments in the village. The Plan as amended, following public hearings, was adopted by the North Palm Beach Village Council, by Ordinance Number 3-72, dated 10 Feb. 1972.

The ~~Appearance Ordinance, and applicable sections of the~~ Appearance Plan~~,~~ is ~~will be~~ administered through the Office of the North Palm Beach director of community development. In 1977, the Planning Commission began serving as~~, with~~ the Appearance Board and continues to act ~~acting~~ upon matters relating to appearance as authorized by the Appearance Plan and Code.

* * *

SECTION III – AREAS OF JURISDICTION

AREAS AND ELEMENTS UNDER JURISDICTION

The jurisdictional areas of the Appearance Plan ~~Board~~ are all areas within the Village of North Palm Beach that are zoned:

R-1 SINGLE-FAMILY DWELLING DISTRICT — Applies to all usages except single family and their normal accessory buildings

R-2 MULTIPLE-FAMILY DWELLING DISTRICT

R-3 APARTMENT DWELLING DISTRICT

C-MU ~~C-A~~ US-1 MIXED-USE ~~COMMERCIAL~~ DISTRICT

~~CB COMMERCIAL DISTRICT~~

~~C1A LIMITED COMMERCIAL DISTRICT~~

C-T ~~C-C~~ TRANSITIONAL COMMERCIAL DISTRICT

C-S SHOPPING ~~C1 NEIGHBORHOOD~~ COMMERCIAL DISTRICT

C-G GENERAL ~~C2 AUTOMOTIVE~~ COMMERCIAL DISTRICT

C-3 REGIONAL MIXED-USE ~~PUBLIC~~ DISTRICT

P PUBLIC DISTRICT

OS ~~C-OS~~ CONSERVATION AND OPEN SPACE

I-1 LIGHT INDUSTRIAL DISTRICT

C-NB~~OZ~~ NORTHLAKE BOULEVARD COMMERCIAL ~~OVERLAY ZONING~~ DISTRICT

* * *

SECTION IV – CRITERIA FOR APPEARANCE

The purpose of these criteria is to establish a checklist of those items which affect the physical aspect of the village environment. Pertinent to appearance is the design of the site, building and structures, planting, signs, street hardware, and miscellaneous other objects which are observed by the public.

These criteria are not intended to restrict imagination, innovation, or variety, but rather to assist in focusing on design principles which can result in creative solutions that will develop a satisfactory visual appearance within the village.

A. RELATIONSHIP OF BUILDINGS TO SITE

1. The site shall be planned to accomplish a desirable connection ~~transition~~ with the streetscape, and to provide for adequate planting, pedestrian movement, and parking areas.

2. Site planning in which setbacks and yards are in excess of zoning restrictions is encouraged where such increases are permitted by the zoning code to provide an interesting relationship between buildings. In zoning districts where a

build-to line is used in lieu of front setbacks, building facades must be placed within those build-to zones unless a waiver is obtained from the build-to requirements.

3. Parking areas shall be concealed where required by the zoning code or treated with decorative elements, building wall extensions, plantings, berms or other innovative means so as to largely screen parking areas from view from public ways and adjoining properties.

4. The height and scale of each building shall be compatible with its site and adjoining buildings except where redevelopment at higher intensities is anticipated in a particular zoning district.

5. Newly installed utility services, and service revisions necessitated by exterior alterations, shall be underground.

6. In relating buildings to site, the provisions of the Zoning Ordinance in regard to bulk regulations, standards, and off-street parking shall be part of this criteria. This shall also apply to subsection B which follows.

B. RELATIONSHIP OF BUILDING AND SITE TO ADJOINING AREA

1. Adjacent buildings of different architectural styles or character may ~~shall~~ be made more compatible by such means as screens, site breaks, and materials.

2. Attractive landscape transitions to adjoining properties are encouraged. ~~shall be provided.~~

3. Harmony in texture, lines, and masses is required. Monotony shall be avoided.

4. Buildings shall have similar scale to those in the surrounding area except where redevelopment at higher intensities is anticipated in a particular zoning district.

* * *

D. BUILDING DESIGN

1. Specific architectural styles are ~~is~~ not ~~restricted~~ mandated or banned, but the village encourages new buildings to reflect or evolve the distinct local character exemplified by the North Palm Beach Country Club Clubhouse, Village Hall and the Public Safety Building. This character is derived from local and regional examples including Anglo-Caribbean architecture, Florida vernacular, and masonry modern.

2. Evaluation of appearance of a project shall be based on quality of its design and relationship to surroundings.

3. ~~2.~~ Buildings shall have good scale and be in harmonious conformance with permanent neighboring development.

4. ~~3.~~ Materials shall have good architectural character and shall be selected for harmony of the building with adjoining buildings.

a. Materials shall be selected for suitability to the type of buildings and the design in which they are used. Buildings shall have the same materials, or those which are architecturally harmonious, used for all building walls and other exterior building components wholly or partly visible from public ways and adjoining properties.

b. Inappropriate materials and methods, and those which will produce inconsistency with the structure of the building, shall be avoided.

c. Materials shall be of durable quality.

d. In any design in which the structural frame is exposed to view, the structural materials shall meet the other criteria for materials.

5. ~~4.~~ Building components—such as windows, doors, eaves, and parapets—shall have good proportions and relationship to one another.

6. The village discourages walls without windows or with too few windows; all-glass walls; and facades without visual interest or with entrances that are concealed or absent.

7. ~~5.~~ Colors shall be harmonious, with bright or brilliant colors used only for accent.

8. ~~6.~~ Mechanical equipment or other utility hardware on roof, ground, or buildings shall be screened from public view with materials harmonious with the building, or they shall be located so as not to be visible from any public ways, including waterways, service alleys, and adjoining properties.

9. ~~7.~~ Exterior lighting shall be part of the architectural concept. Fixtures, standards and all exposed accessories shall be harmonious with building design.

10. ~~8.~~ Refuse and waste removal areas, service yards, storage yards, and exterior work areas shall be screened from public ways, including waterways, service alleys, and adjoining properties, using materials as stated in criteria for equipment screening.

11. ~~9.~~ Monotony of design in single or multiple building projects shall be avoided. Variation of detail, form, and siting shall be used to provide visual interest. In multiple building projects, variable siting or individual buildings may be used to prevent a monotonous appearance.

12. ~~10.~~ Inappropriate, incompatible, bizarre, and exotic designs shall be avoided.

13. ~~11.~~ The provisions of the North Palm Beach Village Code in regard to bulk regulations and standards, and those portions of the Village Code which directly affect appearance, shall be part of the criteria of this subsection.

* * *

Section 8. The Village Council hereby amends Appendix B (Chapter 36), "Subdivisions," of the Village Code of Ordinances to read as follows (additional language is underlined and deleted language is ~~stricken through~~):

* * *

ARTICLE III. DESIGN STANDARDS

* * *

Sec. 36-18. Lots and blocks.

Lots and blocks shall be designed according to acceptable practice for the type of development and use contemplated so as to be aesthetically acceptable; in keeping with the topography and other site conditions and to provide adequate traffic and utility access and circulation; acceptable use of space; provide privacy, adequate drainage and protection of property.

(1) ***Lot size***. The lot size, width, depth, shape and orientation, and the minimum building setback lines shall be appropriate for the location of the subdivision and for the type of development and use contemplated. Lot dimensions and ~~all~~ building setback lines shall meet all standards for their zoning district. ~~not be less than the minimum standards established in the zoning ordinance.~~

(2) ***Reserved.*** ~~*Residence lots, minimum.*~~

~~(a) Lots zoned, restricted, used or intended for use for residences shall have a width of not less than eighty-five (85) feet at the setback line and an area of not less than ten thousand, five hundred (10,500) square feet.~~

~~(b) Corner lots shall have a width of not less than ninety (90) feet at the setback line and an area of not less than thirteen thousand (13,000) square feet.~~

(3) ***Access.*** Each lot~~, for a minimum frontage distance of fifty-seven (57) feet,~~ shall abut on a public street. Lots may not be configured so that the portion fronting on a public street is a narrow extension of the lot primarily for vehicular or pedestrian access. This requirement shall not be construed to prohibit private streets within developments where the land remains under

one ownership. The subdivision shall be so designed that remnants and land-locked areas shall not be created.

(4) ***Lot lines***. Side lot lines shall be, as nearly as practical, at right angles to straight street lines and radial to curved street lines. No lot shall be divided by a municipal boundary.

(5) ***Double frontage lots***. Double frontage, and reverse frontage lots, shall be avoided except where essential to provide separation of residential development from traffic arteries or to overcome specific disadvantages of topography and orientation. A planting screen easement of at least twenty (20) feet, and across which there shall be no right of vehicular access, shall be provided along the line of lots abutting such traffic artery or other inharmonious use.

(6) ***Block lengths***. Block lengths shall not exceed fourteen hundred (1400) feet or be less than three hundred (300) feet, as measured between center lines of bounding streets. See section 36-19(16) for streets ending in culs-de-sac.

Sec. 36-19. Streets.

The arrangement, character, extent, width, grade and location of all streets shall conform to the comprehensive plan now in existence or as may hereafter be adopted, and shall be considered in their relation to existing and planned streets, to topographical conditions, to public convenience and safety, and in their appropriate relation to the proposed uses of the land to be served by such streets.

Where such is not shown in the comprehensive plan now in existence or as may be hereafter adopted, the arrangement of streets in a subdivision shall either: (a) Provide for the continuation or appropriate projection of existing major streets in surrounding areas, or (b) conform to a plan for the neighborhood or be aligned to meet a particular situation where topographical or other conditions make continuance or conformance to existing streets impracticable.

All streets to be established within a subdivision shall meet the following minimum design standards:

* * *

(5) ***Minimum street design specifications.*** All streets to be established in a subdivision shall be designed in accordance with the following minimum specifications:

	Collector Street	***Local Street***	***Marginal Access***
Minimum right-of-way	80 ft.	60 ft.	40 ft.
Percent grade of roadway center line (minimum):	0.30%	0.30%	0.30%

Geometric design shall comply with the latest AASHTO requirements, or as specified in zoning district standards.

* * *

ARTICLE IV. REQUIRED IMPROVEMENTS

* * *

Sec. 36-29. - Sidewalks.

A system of sidewalks shall be provided by the subdivider to provide for safe movement of pedestrians separate from motor vehicle traffic. Except as provided below, sidewalks shall be provided along both sides of all streets, and along all streets where adjacent land is zoned or otherwise designated to be used for multiple-family dwelling purposes or for mixed-use, commercial, and/or office purposes. As an alternative, and as approved by the village council, sidewalks in residential areas may be provided within common open areas.

Sidewalks shall be constructed per standards established by chapter [24], village Code.

Section 9. The Village Council hereby amends Appendix C (Chapter 45), "Zoning," of the Village Code of Ordinances by amending Section 45-2, "Definitions," of Article I, "In General," to read as follows (additional language is underlined and deleted language is ~~stricken through~~):

Sec. 45-2. Definitions.

For the purpose of this code ~~ordinance~~, certain words and terms are defined as follows:

Dwelling unit is a single unit providing complete, independent living facilities for one (1) or more persons including permanent provisions for living, sleeping, eating, cooking and sanitation. For purposes of computing residential density in commercial zoning districts that allow mixed uses, a dwelling unit that contains only one bedroom, or no separate bedroom, will be counted as one-half a dwelling unit.

Liner building means a separate building along a street or other public space that hides parking or blank walls from view.

Medical or dental office or clinic means a facility providing health care services to the public by physicians, dentists, chiropractors, osteopaths, physical therapists, nurses, acupuncturists, podiatrists, optometrists, psychiatrists, veterinarians, or others who are duly licensed to practice their respective medical or dental profession in the State of Florida, as well as those technicians and assistants who are acting under the supervision and control of a licensed health care practitioner. These uses shall not include establishments where patients are lodged overnight and are subject to additional regulations regarding the dispensing of

controlled substances set forth in section 45-36.S of this chapter. Notwithstanding the foregoing, accessory uses for veterinary clinics include day and overnight boarding for patients and outside runs and exercise areas for dogs.

Mixed-use ~~*commercial*~~ means a development pattern where complementary uses of land are located within walking distances. Complementary uses may include ~~combination of~~ retail commercial; ~~and~~ non-retail commercial such as offices; lodging uses; civic and education uses; and dwellings other than one-family detached dwellings. ~~businesses where non-retail tenants comprise fifty (50) percent or more of the gross floor area. Any combination of retail and non-retail businesses where the retail component comprises fifty (50) percent or more of the gross floor area shall be classified as a retail commercial facility.~~

Use group means any of the four groups of allowable uses that certain zoning districts employ to define uses that are permitted by right, permitted by special exception only, or are not permitted in that zoning district. The four groups are Residential Uses, Lodging Uses, Business Uses, and Civic & Education Uses. The following terms are used in these use groups:

RESIDENTIAL USE-GROUP DEFINITIONS:

Mobile home park is defined earlier in section 45-2.

Dwelling, one family detached (single-family dwelling) is a building containing one dwelling unit that is not attached to any other dwelling by any means (see definition of dwelling and dwelling unit earlier in section 45-2).

Dwelling, all other dwelling types (see definition of dwelling and dwelling unit earlier in section 45-2).

Live/work unit is a single dwelling unit in a detached building, or in a multifamily or mixed-use building, that also accommodates permitted commercial uses within the dwelling unit.

Assisted living facility is defined earlier in section 45-2.

Community Residential Home is defined earlier in section 45-2.

LODGING USE-GROUP DEFINITIONS:

Bed and breakfast establishment is a dwelling unit or guest rooms personally and physically operated and occupied by an owner or manager where transient guests are permitted to reside and are provided breakfast in exchange for payment.

Hotel is a facility offering transient lodging accommodation to the general public and which may include additional facilities and services such as restaurants, meeting rooms, entertainment, personal services, and recreational facilities.

Motel is defined earlier in section 45-2.

Time-share unit is defined earlier in section 45-2.

BUSINESS USE-GROUP DEFINITIONS:

Offices, general is a room or group of rooms used to conduct the affairs of a business, profession, service, or government and generally furnished with desks tables, files, and communication equipment. A medical or dental office or clinic is not considered '*Offices, general'* for purposes of this code.

Office or clinic, medical or dental (see definition of *medical or dental office or clinic* earlier in section 45-2; also see additional regulations in subsections 45-36.S and 45-36.T).

Stores & services, general means establishments that sell food or merchandise or provide personal or professional services, including but not limited to the following uses that are defined earlier in section 45-2: drug store; non-retail commercial; office or clinic, medical or dental; personal care; pharmacy; and retail commercial. The following uses are not considered '*Stores & services, general*' for purposes of this code:

- Stores & services, large format
- Adult entertainment
- Contractor and trade operation
- Convenience store with fuel
- Dog daycare
- Drive-through facility (for any use)
- Garage, parking
- Heavy commercial and light industrial
- Limited access self-storage facilities
- Medical marijuana treatment center
- Medical marijuana treatment center dispensing facility
- Restaurant or cocktail lounge
- Telecommunications antenna
- Vehicle sales or repair

Stores & services, large format has the same meaning as '*Stores & services, general*' as defined by this code, except that the establishment contains over 50,000 square feet of enclosed floor area.

Adult Entertainment is defined earlier in section 45-2.

Brewery with offsite distribution is an establishment primarily engaged in the production and distribution of beer, ale or other malt beverages, and which may include accessory uses such as tours of the brewery, retail sales, and/or on-site consumption, e.g., a "taproom."

Contractor and trade operation is an establishment that is primarily engaged in providing an off-site service but which maintains a business office and inventory or equipment at a central location, such as a general contractor or subcontractor, pest control operator, caterer, surveyor, etc.

Convenience store with fuel is an establishment that provide limited services primarily to the motoring public such as fuel sales, car washing, or car detailing, and that may also sell merchandise including food and beverages.

Dog daycare is an establishment providing daytime care and training for domestic dogs and other pets.

Drive-through facility is any establishment that provides physical facilities which allow its customers to obtain food or goods, receive services, or be entertained while remaining in their vehicles.

Garage, Parking. A building or structure or portion thereof used exclusively for the storage or parking of automobiles. Service other than storage shall be limited to refueling, lubrication, and detailing.

Heavy commercial and light industrial is any commercial or industrial use that the Village of North Palm allows only in the C-G and I-1 zoning districts or does not allow in any zoning district, including but not limited to:

- Contractor and trade operation
- Junkyard
- Kennel (commercial)
- Limited access self-storage facility
- Light manufacturing
- Vehicle sales or repair
- Warehouse

Limited access self-storage facility is an enclosed structure primarily for indoor storage.

Medical marijuana treatment center is defined earlier in section 45-2.

Medical marijuana treatment center dispensing facility is defined in in section 45-38 and prohibited in section 45-39.

Restaurant or cocktail lounge is an establishment where food and drink are prepared, served, and consumed mostly within the principal building; outdoor seating is subject to separate provisions in this code. A brewpub or brewery taproom shall be considered a restaurant or lounge provided that there is no offsite distribution or wholesaling.

Telecommunications antenna include antenna towers (see definition of antenna and antenna tower earlier in section 45-2).

Vehicle sales or repair includes any establishment that repairs or displays and sells new or used motor vehicles including automobiles, motorcycles, golf carts, trucks, watercraft, recreational vehicles, and trailers.

CIVIC & EDUCATION USE-GROUP DEFINITIONS:

Child care facility is defined earlier in section 45-2.

Church or place of worship means a premises or structure used primarily or exclusively for religious worship and related religious services on a permanent basis by a tax-exempt religious group, sect, or denomination registered as a not-for-profit organization pursuant to Section 501(C)(3) of the United States Internal Revenue Code, as amended. A church or place of worship may include retreat site camp, convent, seminary or similar facilities operated for religious activities.

Civic space is a small outdoor space that serves as a focal point for civic and recreational uses. Civic spaces are typically constructed by landowners when they build on adjoining property.

Family day care is defined earlier in section 45-2.

Government buildings are provided by village, state, regional, or federal agencies to carry out public purposes.

Hospital or medical center means a facility which provides primary, secondary, or tertiary medical care, emergency medical services, including preventative medicine, diagnostic medicine, treatment and rehabilitative service, medical training programs, medical research, and may include association with medical schools or medical institutions.

Public space is an outdoor space that is maintained by a government, private or nonprofit entity as a civic amenity for the general public. Public spaces include, but are not limited to, plazas, parks, playgrounds and water accesses.

School, public or private means an institution of learning which conducts regular classes and courses of study required for accreditation as an elementary or secondary school by the State Department of Education of Florida.

Section 10. The Village Council hereby amends Appendix C (Chapter 45), "Zoning," of the Village Code of Ordinances by amending Section 45-4, "Conflict of provisions," of Article I, "In General," to read as follows (additional language is underlined and deleted language is ~~stricken through~~):

Sec. 45-4. Conflict of provisions.

(1) It is not intended by this ordinance to interfere with or abrogate or annul any easements, covenants or other agreements between parties.

(2) That where ~~this~~ village codes and ordinances impose~~s~~ a greater restriction upon the use of buildings or premises, or upon the height of buildings, or requires larger open spaces than are imposed or required by other ~~ordinances,~~ rules, regulations, ~~or by~~ easements, covenants, or agreements, the provisions of ~~this~~ village codes and ordinances shall control.

Section 11. The Village Council hereby amends Appendix C (Chapter 45), "Zoning," of the Village Code of Ordinances by amending Section 45-16, "Division of village into districts; districts enumerated," of Article II, "Generally," to read as follows (additional language is underlined and deleted language is ~~stricken through~~):

Sec. 45-16. Division of village into districts; districts enumerated.

In order to classify, regulate and restrict the uses of land and buildings, the height and bulk of buildings, the amount of open spaces about buildings, intensity of land use, the Village of North Palm Beach, Florida is divided into twelve (12) zoning districts, as follows:

R-1 Single-family dwelling district

R-2 Multiple-family dwelling district

R-3 Apartment dwelling district

C-MU US-1 mixed-use ~~C-A commercial~~ district
~~C-B Commercial district~~
~~C-1A Limited commercial district~~

C-T ~~C-C~~ Transitional commercial district

C-S Shopping ~~C-1 Neighborhood~~ commercial district

C-G General ~~C-2 Automotive~~ commercial district

C-3 Regional mixed-use ~~business~~ district

P Public district

OS ~~C-OS~~ Conservation and open space

I-1 Light industrial district

C-NB Northlake Boulevard commercial district

In the creation of this ordinance of the respective districts, the village council has given due and careful consideration to the peculiar suitability of each district for the particular uses and regulations applied thereto and to the densities of population, all in accordance with the comprehensive development plan of the village.

Section 12. The Village Council hereby amends Appendix C (Chapter 45), "Zoning," of the Village Code of Ordinances by amending Section 45-16.1, "Similar uses," of Article II, "Generally," to read as follows (additional language is underlined and deleted language is ~~stricken through~~):

Sec. 45-16.1. - Similar uses.

(a) The community development director shall determine which uses proposed ~~A use~~ within a commercial or mixed-use zoning district have substantially the same characteristics as a use ~~not~~ specifically listed as a permitted use. ~~, but possessing~~ Proposed uses with characteristics that are similar to a permitted use, but not substantially the same, may be established only upon written application to the community development director for a special use permit.

(b) In evaluating an application for a special use permit for the establishment of a similar use, the community development director shall, in consultation with other village departments, consider the characteristics of the proposed use, including, but not limited to, size, intensity, density, operating hours, demands for public facilities, traffic impacts and business practices.

(c) Upon review and evaluation of the application, the community development director shall present his or her recommendation to the village council for final consideration on the next available council agenda.

(d) The village council shall conduct a public hearing on the application for special use permit and determine whether the application meets the criteria set forth in subsection (b) above. Public notice is not required for special use permit hearings. The village council shall grant or deny the application by written order.

(e) In granting a special use permit, the village council may impose conditions necessary to ensure that the proposed use:

(1) Is compatible with the existing or planned character of the neighborhood in which it would be located;

(2) Will not have an adverse impact upon adjacent properties; and

(3) Will not interfere with the use of adjacent properties.

Such conditions may include restrictions on the size and operating hours of the proposed use.

(f) If the conditions imposed by the special use permit are not met, the community development director may revoke the permit. A permit holder may appeal the revocation of a special use permit by filing an appeal, in writing, to the ~~Zoning Board of Adjustment~~ Planning Commission within thirty (30) days of receipt of written notice of revocation.

Section 13. The Village Council hereby amends Appendix C (Chapter 45), "Zoning," of the Village Code of Ordinances by amending Section 45-16.2, "Special exception uses," of Article II, "Generally," to read as follows (additional language is underlined and deleted language is ~~stricken through~~):

Sec. 45-16.2. Special exception uses.

* * *

(e) ***Procedure.***

(1) The special exception use shall be subject to preliminary review by the community development department. Once the community development director certifies that the application is complete, the director shall forward it to the planning commission for a public hearing.

(2) The planning commission shall review the application and forward a recommendation of approval, approval with conditions or denial to the village council. If the special exception request was included with a site plan and appearance application, the planning commission shall forward the complete application to the village council for final decision.

(3) Upon receipt of ~~the~~ a recommendation of the planning commission, the village council shall conduct a public hearing and determine whether the proposed special exception use meets the requirements of this section. The village council shall approve, approve with conditions or deny the application at the close of the public hearing. The approval of a special exception use, with or without conditions, shall be in the form of a written order, resolution or ordinance.

(4) Upon denial of an application for special exception use approval in whole or in part, a period of one (1) year must elapse prior to the filing of a substantially similar application affecting the same property.

* * *

Section 14. The Village Council hereby amends Appendix C (Chapter 45), "Zoning," of the Village Code of Ordinances by amending Section 45-19, "Buildings to conform to district regulations," of Article II, "Generally," to read as follows (additional language is underlined and deleted language is ~~stricken through~~):

Sec. 45-19. Buildings and uses to conform to district regulations.

Except as hereinafter provided:

A. No building shall be erected, reconstructed or structurally altered, nor shall any building or land be used which does not comply with the regulations for the district in which such building or land is located.

B. No building shall be erected, reconstructed or structurally altered to exceed the height or bulk limits herein established for the district in which such building is located.

C. The minimum open spaces around a main building as provided for in this ordinance shall not be encroached upon or be considered as open spaces for any other building.

D. There shall not be more than one (1) main building and its customary accessory building(s) on a lot in the R-1 single-family dwelling district. ~~as authorized by this chapter.~~

E. The types, location and uses of buildings and land publicly owned and used in the performance of a public function may be permitted in any district, provided such type, location and use is approved by the village council. The village council may limit the length of time of such type, location and use.

Section 15. The Village Council hereby amends Appendix C (Chapter 45), "Zoning," of the Village Code of Ordinances by amending Section 45-31, "C-A Commercial District," of Article III, "District Regulations," as set forth in Exhibit 1 attached hereto and incorporated herein by reference (additional language is underlined and deleted language is ~~stricken through~~). All properties within the Village currently included within the C-A Commercial Zoning District as of the effective date of this Ordinance are hereby included within the CMU US-1 Mixed Use Zoning District and shall be subject to the regulations set forth in Exhibit 1.

Section 16. The Village Council hereby amends Appendix C (Chapter 45), "Zoning," of the Village Code of Ordinances by repealing Section 45-31.1, "C-B Commercial District," of Article III, "District Regulations," in its entirety.

Section 17. The Village Council hereby amends Appendix C (Chapter 45), "Zoning," of the Village Code of Ordinances by repealing Section 45-32, "C-1A Limited Commercial District," of Article III, "District Regulations," in its entirety.

Section 18. The Village Council hereby amends Appendix C (Chapter 45), "Zoning," of the Village Code of Ordinances by amending Section 45-32.1, "C-C Transitional Commercial District," of Article III, "District Regulations," as set forth in Exhibit 2 attached hereto and incorporated herein by reference (additional language is underlined and deleted language is ~~stricken through~~). All properties within the Village currently included within the C-C Commercial Zoning District as of the effective date of this Ordinance are hereby included within the C-T Transitional Commercial Zoning District and shall be subject to the regulations set forth in Exhibit 2.

Section 19. The Village Council hereby amends Appendix C (Chapter 45), "Zoning," of the Village Code of Ordinances by amending Section 45-33, "C-1 Neighborhood Commercial District," of Article III, "District Regulations," as set forth in Exhibit 3 attached hereto and incorporated herein by reference (additional language is underlined and deleted language is ~~stricken through~~). All properties within the Village currently included within the C-1 Neighborhood Commercial Zoning District as of the effective date of this Ordinance are hereby included within the C-S Shopping Commercial Zoning District and shall be subject to the regulations set forth in Exhibit 3.

Section 20. The Village Council hereby amends Appendix C (Chapter 45), "Zoning," of the Village Code of Ordinances by amending Section 45-34, "C-2 Commercial District," of Article III, "District Regulations," as set forth in Exhibit 4 attached hereto and incorporated herein by reference (additional language is underlined and deleted language is ~~stricken through~~). All properties within the Village currently included within the C-2 Commercial Zoning District as of the effective date of this Ordinance are hereby included within the C-G General Commercial Zoning District and shall be subject to the regulations set forth in Exhibit 4.

Section 21. The Village Council hereby amends Appendix C (Chapter 45), "Zoning," of the Village Code of Ordinances by amending Section 45-35.1, "Planned Unit Development," of Article III, "District Regulations," as set forth in Exhibit 5 attached hereto and incorporated herein by this reference (additional language is underlined and deleted language is ~~stricken through~~).

Section 22. The Village Council hereby amends Appendix C (Chapter 45), "Zoning," of the Village Code of Ordinances by amending Section 45-35.2, "C-OS Conservation and Open Space District," of Article III, "District Regulations," to read as follows (additional language is underlined and deleted language is ~~stricken through~~):

Sec. 45-35.2. ~~C-~~OS conservation and open space district.

A. *Intent*. The intent of this section is to provide for land uses and activities within land areas designated for the primary purpose of conserving or protecting natural resources of environmental quality.

B. *Uses permitted*. Within any part of the ~~C-~~OS conservation and open space district, no building, structure, land or water shall be used, except for one or more of the following uses:

1. Passive recreation.
2. Flood control.
3. Protection of quality or quantity of ground water or surface water.
4. Floodplain management.
5. Fisheries management.
6. Protection of vegetative community or wildlife habitats.
7. Residential and administrative buildings for the protection of the ~~C-~~OS district.
8. Single-family dwellings with accessory buildings customarily incident thereto.

C. ~~a.~~ *Building height regulations*. No main building shall exceed two (2) stories in height and no accessory building more than one (1) story.

D. ~~b.~~ *Building site area regulations*. The minimum lot or building site for each single-family dwelling shall be one (1) acre of upland area and have at least one (1) lot dimension, width or length, of a minimum of one hundred fifty (150) feet.

E. ~~c.~~ *Yard space regulation*. No building or portion thereof shall occupy a position fifty (50) feet or less from the upland/wetland boundary of the property.

F. ~~C.~~ *Coastal zone protection*. The Village of North Palm Beach adopts, by reference, the Palm Beach County Coastal Protection Ordinance No. 90-2 in its entirety.

Section 23. The Village Council hereby amends Appendix C (Chapter 45), "Zoning," of the Village Code of Ordinances by amending Section 45-35.3, "Northlake Boulevard Overlay Zoning District (NBOZ)," of Article III, "District Regulations," as set forth in Exhibit 6 attached hereto and incorporated herein by reference (additional language is underlined and deleted language is ~~stricken through~~). All properties included within the C-NB Northlake Boulevard Commercial Zoning District and shall be subject to the regulations set forth in Exhibit 6.

Section 24. The Village Council hereby amends Appendix C (Chapter 45), "Zoning," of the Village Code of Ordinances by amending Section 45-36, "General Provisions," of Article III, "District Regulations," to read as follows (additional language is underlined and deleted language is ~~stricken through~~):

Sec. 45-36. General provisions.

* * *

A-1. No addition to any building and no structure or object shall be erected, placed or maintained or built to a height which exceeds four (4) stories or sixty (60) feet where any portion of said building or of the property upon which it is located is within five hundred feet of any R-1, single-family dwelling district, except in the C-MU and C-3 zoning districts where the height limits and maximum height in feet are defined in sections 45-31 and 45-34.1.

* * *

J. Whenever, by this ordinance, off-street parking is required in any commercial or mixed-use district or in any R-3 apartment dwelling district, no such parking facilities shall be hereafter constructed as follows, in addition to any specific requirements of the zoning district: until a permit therefor shall have been issued by the building inspector, and until the plans and specifications therefor are such that:

a. Such off-street parking area is designed with appropriate means of vehicular access to a public street or alley. The maximum width of a

residential accessway to an off-street parking or other vehicular use area shall be twenty (20) feet for two-way vehicular movement and ten (10) feet for one-way vehicular movement, measured at the narrowest point. For commercial uses, two-way accessways shall be twenty-four (24) feet and may be wider only on county and state roads, subject to approval by county and state transportation officials.

(i) No more than one (1) two-way accessway shall be permitted for any street frontage up to one hundred (100) lineal feet or no more than two (2) one-way accessways shall be permitted for any street frontage up to one hundred (100) lineal feet, such standards to be applicable to any property under one (1) ownership.

(ii) Where such ownership involves over one hundred (100) feet of street frontage, one (1) additional two-way or two (2) additional one-way drives may be permitted for each additional one hundred (100) feet of frontage or major fraction thereof, except where restricted by other provisions of this code or by county and state transportation regulations.

b. Such off-street parking area is designed with appropriate vehicular maneuvering areas. Each required parking space shall measure at least 9 feet by 18 feet.

c. Such off-street parking area is paved with an asphaltic or concrete surfacing, or other material designed to prevent dust.

d. Such off-street parking area is so constructed, graded and surfaced as to prevent surface water from draining onto public right-of-way, or on adjoining properties, the outlets for such surface waters to be connected directly or indirectly to storm sewer conduits terminating in existing publicly controlled waterways or in other seepage areas approved by the building department.

e. Such off-street parking areas shall be used for vehicular traffic only, with no sales, dead storage, repair work, dismantling or servicing of any kind unless expressly permitted by the zoning of the district in question.

f. If lighting of such areas is to be provided, the plans therefor shall be such that such lighting shall reflect away from any public street and at such an angle as to prevent glare or undue illumination of residential properties in the neighborhood.

g. Parking lots shall be landscaped as provided in the landscaping regulations in Article VIII (section 45-81 et seq.).

h. Parking lots shall be designed and improved to facilitate loading and unloading. There shall be adequate space for standing, loading and

unloading services to avoid undue interference with public use of streets or alleys.

* * *

M. *Building height regulations.*

(1) Within the area of the Village of North Palm Beach which lies north of the Intracoastal Waterway and west of U.S. Highway No. 1, no building or structure shall exceed sixteen (16) stories or one hundred sixty (160) feet.

(2) Within the area of the Village of North Palm Beach which lies north of the Intracoastal Waterway and east of U.S. Highway No. 1, no building or structure shall exceed twenty-two (22) stories or two hundred twenty (220) feet.

(3) Within the area of the Village of North Palm Beach which lies south of the Intracoastal Waterway and east of U.S. Highway No. 1, no building or structure shall exceed four (4) stories or forty (40) feet, except in the C-MU zoning district where the height limits are defined in section 45-31.

(4) Within the area of the Village of North Palm Beach which lies south and west of the Intracoastal Waterway and west of U.S. Highway No. 1, no building or structure shall exceed four (4) stories or forty (40) feet, except in the C-MU and C-3 zoning districts where the height limits are defined in sections 45-31 and 45-34.1.

* * *

Q. *Outdoor seating.*

(1) *Applicability.* Outdoor seating shall be permitted as an accessory use to a building in which a food service establishment is operated, provided that:

a. The outdoor seating area is adjacent to that portion of the food service establishment which is inside the building.

b. The outdoor seating is located on property which is either owned or leased by the adjacent food service establishment or the landlord of such food service establishment. (See exceptions in subsection (6).)

c. The outdoor seating can be accommodated without impeding the access of the general public, including persons with disabilities, to the portion of the food service establishment which is located inside the building, or to any other commercial business or other use.

d. The outdoor seating can be accommodated without creating a need for additional parking spaces which could not be provided on the same site as the building for which the outdoor seating would be an accessory use

or would create a non-conforming status for existing parking provided for such building. (See exceptions in subsection (6).)

e. No outdoor seating shall be permitted for adult entertainment establishments.

(2) *Permitting process.* An applicant for approval of outdoor seating shall include the proposed outdoor seating as part of an overall application for a building permit and/or site plan and appearance approval ~~certificate of appropriateness~~ or shall seek amendment of an existing building permit and/or site plan and appearance approval ~~certificate of appropriateness~~ to allow for outdoor seating, pursuant to the applicable provisions of this Code. Every application involving outdoor seating shall include the following, in addition to and not in place of anything else which may otherwise be required by any other provision of this Code:

a. A site plan, drawn to scale, which shows at least the building for which outdoor seating will be an accessory use; the location of the food service establishment which will use the outdoor seating; the location of the outdoor seating and all related fencing screening, or dividing materials; the location of any sidewalks or other pedestrian walkways or passageways which are adjacent to or will be affected by the outdoor seating; and the location of all existing or additional parking for such building.

b. A copy of the written consent of any person or business who other than the applicant owns or leases any property, including any sidewalk or other public passageway, upon [which] the outdoor seating would be located.

c. Photographs, renderings, or samples showing the style and color of all furnishings, fencing, screening, or dividing material to be used for or in conjunction with the outdoor seating.

(3) *Conditions of outdoor seating.* Outdoor seating shall comply at all times with the following conditions:

a. Outdoor seating shall be arranged, when in use, in a manner that allows a pedestrian walkway in compliance with applicable accessibility, building, ~~codes~~ and fire codes.

b. Outdoor seating located on a pedestrian walkway which provides access to more than one (1) occupant of a building, as in a shopping center, shall be arranged, when in use, in a manner that maintains a passage of not less than five (5) feet in width.

c. Outdoor seating of an applicant shall not be located on any sidewalk, passageway, or other property adjacent to any other business.

d. Outdoor seating shall not occupy any area designated for parking. (See exceptions in subsection (6).)

e. Outdoor seating which is used for the service and sale of food or beverages of any kind within the outdoor seating area, shall be physically separated and visually distinct from any immediately adjacent public passageway or walkway by means of approved fencing or screening material which is not less than two (2) feet in height, by means of one (1) or more planter boxes and other plant container, by means of some other approved divider, or any combination of such means, but not including tables, chairs or other seating.

f. Outdoor seating areas may only contain tables, chairs, umbrellas and/or awnings and required fencing or screening materials. All such equipment shall be compatible in color and style with the exterior of the building and shall not contain or have affixed to it any sign, lettering or advertising of any kind.

g. Outdoor seating shall be maintained in a secure manner, whenever the food service establishment is closed to the public.

h. Establishments with outdoor seating with food and beverage service shall meet all health code and other applicable code requirements of restaurants.

i. Any permanent or temporary structures associated with outdoor seating, including, but not limited to, awnings and covered roofs shall not encroach into the required building setback areas. Tables, chairs, umbrellas, fencing, screening and dividing materials shall not be located closer to the property line than two-thirds (2/3) of the required front, side or rear building setback. (See exceptions in subsection (6))

(4) *Limitations on use.* Except for outdoor seating located in an inner court:

a. All sales and service of food and beverages in an outdoor seating area are prohibited between the hours of 10:30 p.m. and 7:00 a.m., Sunday through Thursday, and between the hours of 11:00 p.m. and 7:00 a.m., Friday through Saturday.

b. Outdoor seating areas shall be in compliance with the village's noise regulations.

(5) *General requirements.* Outdoor seating which increases the total number of seats available at a food service establishment shall be considered an expansion of use. Such outdoor seating shall be included in any calculation of the total number of seats provided by the food service establishment but not limited to parking, restroom facilities and business taxes.

(6) *Special requirements for C-MU and C-3 zoning districts.* In the C-MU and C-3 zoning districts only, the preceding requirements for outdoor seating are modified as follows:

a. Outdoor seating may be provided on sidewalks that have been constructed on sidewalk easements that were required by this code as long as this seating does not unduly restrict pedestrian movement. Outdoor seating may not be provided on sidewalks within the right-of-way of US Highway 1, Yacht Club Drive, Anchorage Drive, Lighthouse Drive, Ebbtide Drive, or Northlake Boulevard.

b. Outdoor seating may be provided within build-to zones required by this code.

c. Outdoor seating may be provided on an area designated for parking and/or loading without providing additional parking spaces. However, permission for such outdoor seating would be on a provisional basis and would be subject to revocation as follows:

i. Permission may be revoked by the community development director if there is evidence that the permission is contributing to spillover parking on nearby properties.

ii. Permission would be automatically revoked if the code enforcement special magistrate issues an order confirming a violation of a parking-related provision of this code.

Section 25. The Village Council hereby amends Appendix C (Chapter 45), "Zoning," of the Village Code of Ordinances by amending Section 45-38, "I-1 Light Industrial District," of Article III, "District Regulations," to read as follows (additional language is underlined and deleted language is ~~stricken through~~):

Sec. 45-38. I-1 light industrial district.

* * *

D. *Supplemental use regulations for select permitted or special exception uses*. Permitted or special exception uses in the I-1 district shall be subject to the following conditions.

* * *

12. Dog daycare:

* * *

d. *Outdoor runs/dog exercise areas*: If used, outdoor runs or ~~animal~~ dog exercise areas shall be located a minimum of 300 feet from a residential use or zoning district or shall be fenced utilizing a sound-absorbing material on any side

which is adjacent to or separated only be street from any residential use or zoning district to contain the sound as required by chapter 19, article VI of this code. Such outdoor runs or dog exercise areas shall~~,~~ be hard surfaced or grassed and if hard surfaced, shall have ~~with~~ drains provided every ten feet and be connected to a central or individual sanitary facility approved by Seacoast Utility Authority or the Palm Beach County Health Department. Grassed outdoor runs and dog exercise areas shall be maintained by removing dog waste daily. A minimum six-foot high ~~chain-link~~ fence shall be required around outdoor runs and dog exercise areas. In addition, where chain-link fencing is used, a continuous solid opaque hedge a minimum of four feet at installation shall be provided around the outdoor run area or dog exercise area. Animals shall not be left overnight in outdoor runs or dog exercise areas.

* * *

15. Kennel, commercial:

a. *Limitations of use*: A commercial kennel shall be limited to the training, boarding and grooming of dogs and cats.

b. *Outdoor runs*: Outdoor runs shall comply with the requirements of Section 45-38(D)(12 ~~11~~)d above.

* * *

22. Veterinary clinic: Outdoor runs shall comply with the requirements of Section 45-38(D)(12 ~~11~~)d above.

Section 26. The Village Council hereby amends Appendix C (Chapter 45), "Zoning," of the Village Code of Ordinances by amending Article VI, "Amendments – Fees; Waiting Periods," to read as follows (additional language is underlined and deleted language is ~~stricken through~~):

ARTICLE VI. ~~AMENDMENTS—FEES; WAITING PERIODS~~ REZONINGS; VARIANCES; WAIVERS

Sec. 45-49. Applications for rezoning, etc.

(1) All applications for rezoning ~~and all applications to amend, supplement, modify or repeal the boundaries, districts, regulations or restrictions established by this chapter~~ shall be done by application to ~~the planning commission of~~ the village. The application ~~to the planning commission~~ may be ~~made~~ initiated by ~~any~~ property owners to rezone their own property or by the village manager. ~~tenant or by a governmental office, department, board or bureau. Such applications shall be filed with the community development department of the village, which shall transmit the same, together with all the~~

~~plans, specifications, application blank and other papers pertaining to the application, to the planning commission~~. Any such application, except by the village manager, ~~a governmental agency,~~ must be accompanied by the filing fee established in the master fee schedule adopted annually as part of the village budget together with a deposit of the estimated cost of the village processing the application. Upon the village determining the actual costs, applicants shall pay the balance, if any, in full of such costs including advertising prior to final consideration of the application. If the deposit exceeds actual costs, the balance shall be refunded to applicant.

(2) All applications ~~to the planning commission~~ concerning rezoning shall be upon forms to be supplied by the community development department.

(3) Whenever, after review, investigation and hearing, any application for a change of district classification has been denied, an application for a like change cannot be reinstated for a period of at least one (1) year after said denial.

(4) Public notice of all hearings shall be provided as required by section 21-3 of the village Code.

Sec. 45-50. ~~Application for~~ Variances.

(1) All applications for variances to regulations or restrictions established by this ordinance shall be ~~done~~ initiated by application to ~~the board of adjustment of~~ the village. The application ~~to the board of adjustment~~ may be made by any property owner or tenant or by a governmental office, department, board or bureau~~. Such applications shall be~~ and filed with the community development department. ~~director~~ of the village~~, who shall transmit the same, together with all the plans, specifications, application blank and other papers pertaining to the application, to the board of adjustment.~~ Any such application, except by a governmental agency, must be accompanied by the filing fee established in the master fee schedule adopted annually as part of the village budget.

(2) All applications ~~to the board of adjustment~~ concerning variances shall be upon forms to be supplied by the community development department.

(3) Criteria for decisions on variance applications are provided in section 21-21 of the village code.

(4) ~~(3)~~ Public notice of all hearings shall be provided as required by section 21-3 of the village code.

Sec. 45-51. Waivers.

(1) In the C-MU and C-NB zoning districts, waivers may be requested from certain regulations in this code. An applicant requesting a waiver shall demonstrate that the waiver provides a public benefit, including, by way of example, high-quality architectural design, pedestrian amenities, not cost

dedication of rights-of-way, construction of public parking, public art or other improvements adjacent to the property, preservation of environmentally-sensitive lands, provision of public parks and/or open spaces, or mixed uses which reduce impacts on village services.

(2) An application for such waiver may be made by any property owner or tenant or by a governmental office, department, board or bureau. Such applications shall be filed with the community development director of the village, using forms supplied by the director, who shall transmit the same, together with all the plans, specifications, application materials, and other papers pertaining to the application, to the planning commission. The applicant shall identify each waiver request in writing as part of the application, fully explaining the nature of the request, the extent to which it departs from a standard zoning regulation, and the basis for which it is sought.

(3) The planning commission will hold a public hearing in conjunction with the site plan and appearance review hearing for the subject property (see sections 6-30–6-60). When evaluating waiver requests, the planning commission will consider the following factors and any additional criteria set forth in the relevant zoning district:

a. The extent to which the alternate standard proposed by the applicant differs from the code's standard that would be waived;

b. Whether the granting of the waiver will lead to innovative design in which other minimum standards are exceeded;

c. Whether the request clearly demonstrates the public benefits to be derived;

d. Whether the request furthers the goals of the village master plan, and exemplifies the architectural, building, and site design techniques desired within the Village's Appearance Plan;

e. Whether the requested waiver can be granted in the zoning district;

f. Any unusual circumstances regarding the property or immediate area, including the location of power lines, specimen trees, or shade trees;

g. The effect of approving or denying the waiver on the development project and on the surrounding area;

h. Consistency with the comprehensive plan;

i. Recommendations of village staff;

j. Testimony from the applicant; and

h. Testimony from the public.

(4) At the end of the public hearing, the planning commission will make a decision on each requested waiver. Approval is contingent on the planning commission making these findings and any additional findings set forth in the relevant zoning district:

a. The alternate standard proposed by the applicant is acceptable for the specific site and building;

b. The proposed waiver does not detract from the design principles supporting these zoning districts and the broader intent of this code;

c. The proposed waiver will not be injurious to surrounding properties or nearby neighborhoods; and

d. The proposed waiver is not inconsistent with the Comprehensive Plan.

(5) The planning commission's action on waivers will be considered a recommendation to the village council instead of a decision if a special exception was requested along with one or more waivers, or if a waiver was requested for an extra story pursuant to 45-31.E.4, or if the concurrent site plan and appearance decision is appealed in accordance with section 6-35. The village council will make a decision on such waivers at the same time that a decision is made on all other aspects of the application.

(6) The applicant or any interested party may file an appeal to the village council on any decision on waivers. Such an appeal will also function as an appeal of the site plan and appearance application. The appeal shall be filed or made within ten (10) days after decision of the planning commission on forms provided by the village. Appeals shall set forth the alleged inconsistency or nonconformity with procedures, criteria, or standards set forth in this code. The village council shall decide an appeal within thirty (30) days of the filing of such appeal unless an extension of time is consented to by the applicant, and such filing shall suspend any building permit issued pursuant to the ruling of the planning commission until the village council has decided the appeal. The village council may review any decision of the planning commission and their disposition of the matter shall be final.

(7) Public notice of all waiver hearings shall be provided as required by section 21-3 of this code.

Section 27. The Village Council hereby amends Appendix C (Chapter 45), "Zoning," of the Village Code of Ordinances by amending Article VII, "Nonconforming Uses of Land and Structures," to read as follows (additional language is underlined and deleted language is ~~stricken through~~):

Sec. 45-60. Intent.

(1) Within the districts established by this ordinance, or amendments that may later be adopted, there exist lots, structures, uses of land and structures and

characteristics of use which were lawful before this ordinance was passed or amended, but which would be prohibited, regulated, or restricted under the terms of this ordinance or future amendments.

(2) Except as explicitly provided in this article, it is the intent of this ordinance to permit these nonconformities to continue until they are removed, but not to encourage their continuation. Such nonconformities ~~uses~~ are declared by this ordinance to be incompatible with ~~permitted uses in~~ the district involved. It is further the intent of this ordinance that nonconformities shall not be enlarged upon, expanded or extended, nor be used as grounds for adding other structures or uses prohibited elsewhere in the same district.

Sec. 45-61. - Extension and enlargement of nonconforming uses.

(1) A nonconforming use of a structure, a nonconforming use of land, or a nonconforming use of structure and land shall not be extended or enlarged after passage of this ordinance by attachment on a building or premises of additional signs intended to be seen from off the premises, or by the addition of other uses of a nature which would be prohibited generally in the district involved. If an existing use was legally permitted on its site prior to changes in the C-MU, C-3, or C-NB zoning districts in 2020 but is not listed as a permitted use in the new district, that existing use will continue to be deemed a permitted use and will not be subject to the restrictions in this paragraph.

(2) To avoid undue hardship, nothing in this ordinance shall be deemed to require a change in the plans, construction, or designated use of any building on which actual construction was lawfully begun prior to the effective date of adoption or amendment of this ordinance and upon which actual building construction has been diligently carried on. Actual construction is hereby defined to include the placing of construction materials in permanent position and fastened in a permanent manner. Except that where demolition or removal of an existing building has been substantially begun preparatory to rebuilding, such demolition or removal shall be deemed to be actual construction, provided that work shall be diligently carried on until completion of the building involved.

Sec. 45-62. Nonconforming lots of record.

(1) In any district in which single-family dwellings are permitted, notwithstanding limitations imposed by other provisions of this ordinance, a single-family dwelling and customary accessory buildings may be erected on any single lot of record at the effective date of adoption or amendment of this ordinance. Such lot must be in separate ownership and not of continuous frontage with other lots in the same ownership. This provision shall apply even though such lot fails to meet the requirements for area or width, or both, that are generally applicable in the district, provided that yard dimensions and other requirements not involving area or width, or both, of the lot shall conform to the regulations for the district in which such lot is located.

Variance of area, width, or yard requirements shall be obtained only through action of the board of adjustment.

(2) If two (2) or more lots or combinations of lots and portions of lots with continuous frontage in ~~angle~~ [single] ownership are of record at the time of passage or amendment of this ordinance, and if all or part of the lots do not meet the requirements for lot width and area as established by this ordinance, the lands involved shall be considered to be an undivided parcel for the purposes of this ordinance, and no portion of said parcel shall be used or sold which does not meet lot width and area requirements established by this ordinance, nor shall any division of the parcel be made which leaves remaining any lot with width or area below the requirements in this ordinance.

Sec. 45-63. Nonconforming uses of land.

Where, at the effective date of adoption or amendment of this ordinance, lawful use of land exists that is made no longer permissible under the terms of this ordinance as enacted or amended, and where such use involves no individual structure with a replacement cost exceeding one thousand dollars ($1,000.00), such use may be continued, so long as it remains otherwise lawful, subject to the following provisions:

(1) No such nonconforming use shall be enlarged or increased, nor extended to occupy a greater area of land than was occupied at the effective date of adoption or amendment of this ordinance; unless such use is changed to a use permitted in the district in which such use is located;

(2) No such nonconforming use shall be moved in whole or in part to any other portion of the lot or parcel occupied by such use at the effective date of adoption or amendment of this ordinance;

(3) If any such nonconforming use of land ceases for any reason for a period of more than ninety (90) consecutive days, any subsequent use of such land shall conform to the regulations specified by this ordinance for the district in which such land is located;

(4) No additional structure which does not conform to the requirements of this ordinance shall be erected in connection with such nonconforming use of land.

Sec. 45-64. - Nonconforming structures.

Where a lawful structure exists at the effective date of adoption or amendment of this ordinance that could not be built under the terms of this ordinance by reason of restrictions on area, lot coverage, height, yards or other characteristics of the structure or its location on the lot, such structure may be continued so long as it remains otherwise lawful subject to the following provisions:

(1) No such structure may be enlarged or altered in a way which increases its nonconformity, but any structure or portion thereof may be altered to decrease its nonconformity;

(2) Should such structure be destroyed by any means to an extent of more than fifty (50) percent of its replacement cost at time of destruction, as determined by the village engineer or village building official, it shall not be reconstructed except in conformity with the provisions of this ordinance;

(3) Should such structure be moved for any reason for any distance whatever, it shall thereafter conform to the regulations of the district in which it is located after it is moved.

(4) However, if an existing structure was legally permitted on its site prior to changes in the C-MU, C-3, or C-NB zoning districts in 2020 but could not be built under the standards in the new district, that existing structure will continue to be deemed a lawful structure and will not be subject to the restrictions in paragraphs (1) and (2). Such structure may be expanded laterally and/or vertically without complying with all new requirements for building frontages, build-to zones, and parking lot setbacks, provided the expansion brings the structure considerably closer to the 2020 requirements than the existing structure.

Sec. 45-65. Nonconforming uses of structures or of structures and premises in combination.

(1) If a lawful use involving individual structures with a replacement cost of one thousand dollars ($1,000.00) or more, or of structure and premises in combination, exists at the effective date of adoption or amendment of this ordinance, that would not be allowed in the district under the terms of this ordinance, the lawful use may be continued so long as it remains otherwise lawful, subject to the following provisions:

(a) No existing structure devoted to a use not permitted by this ordinance in the district in which it is located shall be enlarged, extended, constructed, reconstructed, moved or structurally altered except in changing the use of the structure to a use permitted in the district in which it is located;

(b) Any nonconforming use may be extended throughout any parts of a building which were manifestly arranged or designed for such use at the time of adoption or amendment of this ordinance, but no such use shall be extended to occupy any land outside such building;

(c) Any structure, or structure and land in combination, in or on which a nonconforming use is superseded by a permitted use, shall thereafter conform to the regulations for the district in which such structure is located, and the nonconforming use may not thereafter be resumed;

(d) When a nonconforming use of a structure, or structure and premises in combination, is discontinued or abandoned for six (6) consecutive months or for eighteen (18) months during any three-year period (except when government action impedes access to the premises), the structure, or structure and premises in combination, shall not thereafter be used except in conformance with the regulations of the district in which it is located;

(e) Where nonconforming use status applies to a structure and premises in combination, removal or destruction of the structure shall eliminate the nonconforming status of the land. Destruction for the purpose of this subsection is defined as damage to an extent of more than fifty (50) percent of the replacement cost at time of destruction.

(2) However, if an existing use of a structure was legally permitted on its site prior to changes in the C-MU, C-3, or C-NB zoning districts in 2020 but is not listed as a permitted use in the new district, that existing use will continue to be deemed a permitted use and will not be subject to the restrictions in section 45-65(1).

(3) ~~(2)~~ Nonconformities not involving the use of a principal structure, e.g., open storage, building supplies, vehicle, mobile home, implement and machinery storage, signs, billboards, junkyards, commercial animal yards and the like, shall be discontinued within two (2) years of the effective date of this ordinance or amendment.

* * *

Section 28. The Village Council hereby amends Appendix C (Chapter 45), "Zoning," of the Village Code of Ordinances by adopting a new Article VIII, "Landscaping," as set forth in Exhibit 7 attached hereto and incorporated herein.

Section 29. The provisions of this Ordinance shall become and be made a part of the Code of the Village of North Palm Beach, Florida. All cross-references to the names of zoning districts are hereby updated, including but not limited to those in Sections 45-20, 45-21, and 45-36, and any other sections that referred to the prior names for the zoning districts as follows:

A. All references to the C-1A, C1A, C-B or CB Zoning Districts shall be deleted.

B. All references to the C-A or CA Zoning District shall be changed to the C-MU Zoning District.

C. All references to the C-C or CC Zoning District shall be changed to the C-T Zoning District.

D. All references to the C-1 or C1 Zoning District shall be changed to the C-S Zoning District.

E. All references to the C-2 or C2 Zoning District shall be changed to the C-G zoning district.

F. All references to the C-OS or COS zoning district shall be changed to the OS Zoning District.

G. All references to the NBOZ Overlay Zoning District shall be changed to the C-NB Zoning District.

Section 30. If any section, paragraph, sentence, clause, phrase or word of this Ordinance is for any reason held by a court of competent jurisdiction to be unconstitutional, inoperative or void, such holding shall not affect the remainder of this Ordinance.

Section 31. All ordinances or parts of ordinances and resolutions or parts of resolutions in conflict herewith are hereby repealed to the extent of such conflict.

Section 32. This Ordinance shall take effect upon the effective date of Ordinance No. 2020-05.

PLACED ON FIRST READING THIS _____ DAY OF _____, 2020.

PLACED ON SECOND, FINAL READING AND PASSED THIS _____ DAY OF _____, 2020.

(Village Seal) _____

MAYOR

ATTEST:

_____

VILLAGE CLERK

APPROVED AS TO FORM AND
LEGAL SUFFICIENCY:

_____

VILLAGE ATTORNEY

EXHIBIT 1 (C-A TO C-MU)

Sec. 45-31. - C-MU US-1 mixed-use ~~C-A commercial~~ district.

A. ***General description.*** This mixed-use district will encourage the redevelopment of the US Highway 1 corridor into a vibrant mixed-use place for businesses, visitors, and residents of North Palm Beach. A Citizens Master Plan, adopted in 2016, envisioned the US Highway 1 corridor evolving into a better working and living environment with walkable and bikeable streets, compact mixed-use buildings, and convenient access to many forms of transportation. The C-MU zoning district is a form-based code that uses clear and predictable standards to guide redevelopment into this pattern.

~~This tourist-commercial district is established to provide areas within which the principal use of land is devoted to commercial establishments and tourist-oriented trade. The intent is to reserve land which, because of particular location and natural features, is adapted to local and tourist uses, and to encourage the development of these locations for such uses and in such a manner as to minimize traffic hazards and interference with other land uses.~~

B. ***Allowable uses.***

1. Table 1 indicates allowable uses in the C-MU zoning district. ~~The following uses be permitted in the C-A commercial district:~~

a. The uses listed in Table 1 are grouped into four use groups: Residential Uses, Lodging Uses, Business Uses, and Civic & Education Uses.

b. In one of the columns following each listed use, a symbol is provided to indicate that:

i) This use is permitted by right; or

ii) This use may be approved as a special exception; see section 45-16.2 for standards and procedures; or

iii) This use, like other uses not listed in Table 1, is not permitted in the C-MU district.

c. Terms in Table 1 are defined in section 45-2 under "Use Groups."

d. Also refer to section 45-16.1 on uses that are similar to uses listed in Table 1.

EXHIBIT 1 (C-A TO C-MU)

Table 1 Allowable Uses

	PERMITTED USE	SPECIAL EXCEPTION	NOT PERMITTED
RESIDENTIAL USES			
Mobile home park			●
Dwelling, one family detached			●
Dwelling, all other dwelling types	●		
Live/work unit	●		
Assisted living facility		●[1]	
Community residential home	●[2]		
LODGING USES			
Bed-and-breakfast establishment	●		
Hotel	●		
Motel	●		
Time-share unit	●		
BUSINESS USES			
Offices, general	●		
Office or clinic, medical or dental	●		
Stores & services, general	●		
Stores & services, large format		●	
Adult entertainment			●
Convenience store with fuel			●
Dog daycare		●	
Drive-through facility (for any use)		●	
Garage, parking	●		
Heavy commercial and light industrial			●
Medical marijuana treatment center			●
Restaurant or cocktail lounge	●		
Brewery with offsite distribution		●	
Telecommunications antennas		●	
CIVIC & EDUCATION USES			
Child care facility		●	
Church or place of assembly	●		
Civic space	●		
Family day care	●		
Government building	●		
Hospital or medical center			●
Public space	●		
School, public or private		●	

[1] Only as part of a mixed-use development that complies with Future Land Use Policy 1.B.3 in the Comprehensive Plan

[2] Subject to the same requirements as apply in the R-2 zoning district

2. The Comprehensive Plan establishes restrictions on certain properties through classifications in the future land use atlas or through specific policies. Current examples in the C-MU district include the following parcels, which are indicated on the regulating plan:

a. 639 US Highway 1 (assisted living facility) requires PUD approval as a mixed-use development pursuant to Future Land Use Policy 1.B.3.

b. 201–230 Mariner Court (condominium) is classified "Medium-Density Residential," which restricts it to residential uses only, with density restricted by Special Policy 5.18.

c. 555 US Highway 1 (Faith Lutheran Church) is classified "Public Buildings & Grounds."

d. 501 US Highway 1 (Village Hall) and 303 Anchorage Drive (Library) are classified "Public Buildings & Grounds."

e. 560 US Highway 1 (Police Station) is classified as "Other Public Facilities."

~~1. Hotel, motels and time-share units.~~

~~2. Restaurants and cocktail lounges where food and drink may be consumed on the premises only and where eating and serving areas are entirely contained within the building or the premises otherwise qualify under outdoor seating provisions of Appendix C—Zoning not including drive-in hamburger, ice cream, soft drink, or other drive-in and/or carry-out eating establishments.~~

~~3. Golf clubs and their accessory uses—such as restaurant, bar-cocktail lounges, driving ranges and golf equipment stores.~~

~~4. Financial institutions.~~

~~5. Professional offices, studios and clinics.~~

~~6. Private clubs and lodges.~~

~~7. Veterinary establishments, provided that all animals shall be kept inside soundproof and air conditioned buildings; provided there are no animal cemeteries used in connection therewith.~~

~~8. Funeral homes; provided that no process for the disposal of bodies is used in connection therewith, including cremation.~~

~~9. Churches and/or auditoriums.~~

~~10. Personal service establishments, such as barbershops, beauty shops, health salons.~~

~~11. Utility company offices.~~

~~12. Florist shops.~~

~~13. Clothing stores.~~

~~14. Stationery stores, book stores and/or art supply shops.~~

~~15. Pharmacies or apothecaries.~~

~~16. Photographic studios and camera shops.~~

~~17. Bakery shops, where products are sold at retail only.~~

~~18. Sporting goods stores.~~

~~19. Personal gift shops.~~

~~20. Jewelry stores.~~

~~21. Marinas and their accessory uses, such as wet boat storage facilities, gasoline supplies, minor repair facilities that are incidental to wet boat storage and do not involve large boats and/or engine overhaul.~~

C. ***Regulating plan and street frontages.*** ~~*Conditions for permitted uses.*~~

1. The C-MU zoning district includes a regulating plan that shows existing conditions (e.g. lot lines, building footprints, and rights-of-way) and then defines how and where certain regulations will apply (e.g. setbacks and height restrictions). The regulating plan for the C-MU district is presented in Figures 1 through 4.

2. The regulating plan also defines the street frontages of all lots as either corner, mid-block, or local street. These street frontage types determine allowable building frontages. The building frontage type selected by a landowner determines many of the specific regulations that will apply to redevelopment, including the build-to zone or setback along the street frontage. See subsection 45-31.D for details.

3. The remainder of the C-MU district provides standards on these subjects:

a. ***Site and bulk standards*** are provided in subsection 45-31.E, including setbacks, build-to zone, building frontage standards, building height, floor and ceiling height, density, and landscape standards.

b. ***Architectural features*** are addressed in subsection 45-31.F, including entrances, façade transparency, awnings, balconies, and bay windows.

c. ***Street, alley, and easement standards*** are provided in subsection 45-31.G.

d. ***Parking standards*** are provided in subsection 45-31.H.

e. ***Review procedures*** are provided in subsection 45-31.I.

~~1. All activities (except restaurants that qualify under outdoor seating provisions of Appendix C—Zoning, golf clubs, swimming pools and wet boat storage), sales and storage of goods must be conducted entirely within completely enclosed buildings with permanent nonmoving outside walls.~~

~~2. No outside sidewalk or parking lot storage or display of merchandise will be permitted.~~

~~3. No manufacturing, or production of products for retail or wholesale will be permitted except for bakeries and their related retail sales items.~~

~~4. All new marinas and major improvements to existing marinas shall provide sewage pump-out service to boats seven (7) meters (twenty-two and ninety-seven hundredths (22.97) feet) in length or more.~~

EXHIBIT 1 (C-A TO C-MU)

1 **Figure 1 Regulating Plan, Yacht Club Dr. to Anchorage Dr (north)**

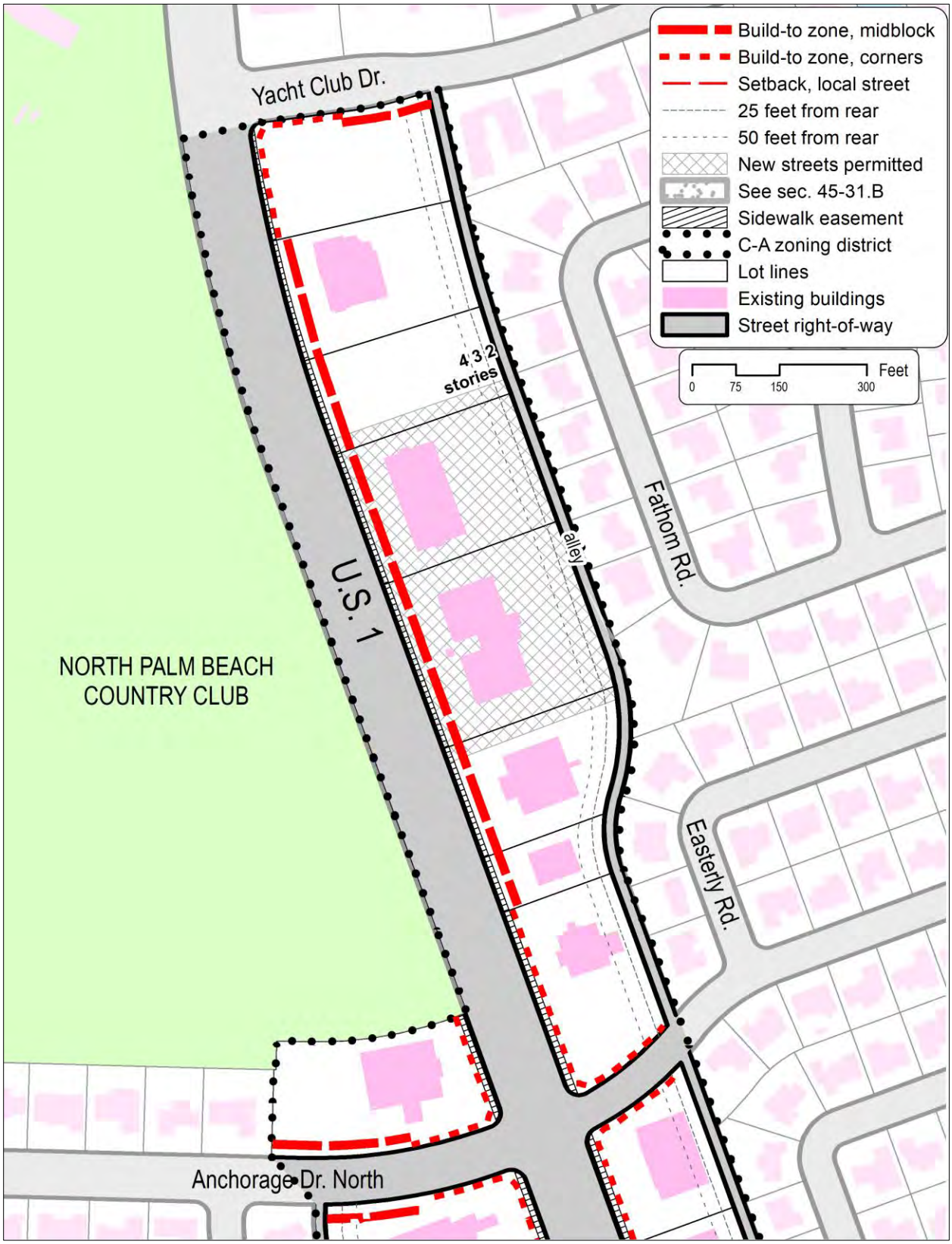

1 **Figure 2 Regulating Plan, Anchorage Dr (north) to Lighthouse Dr.**

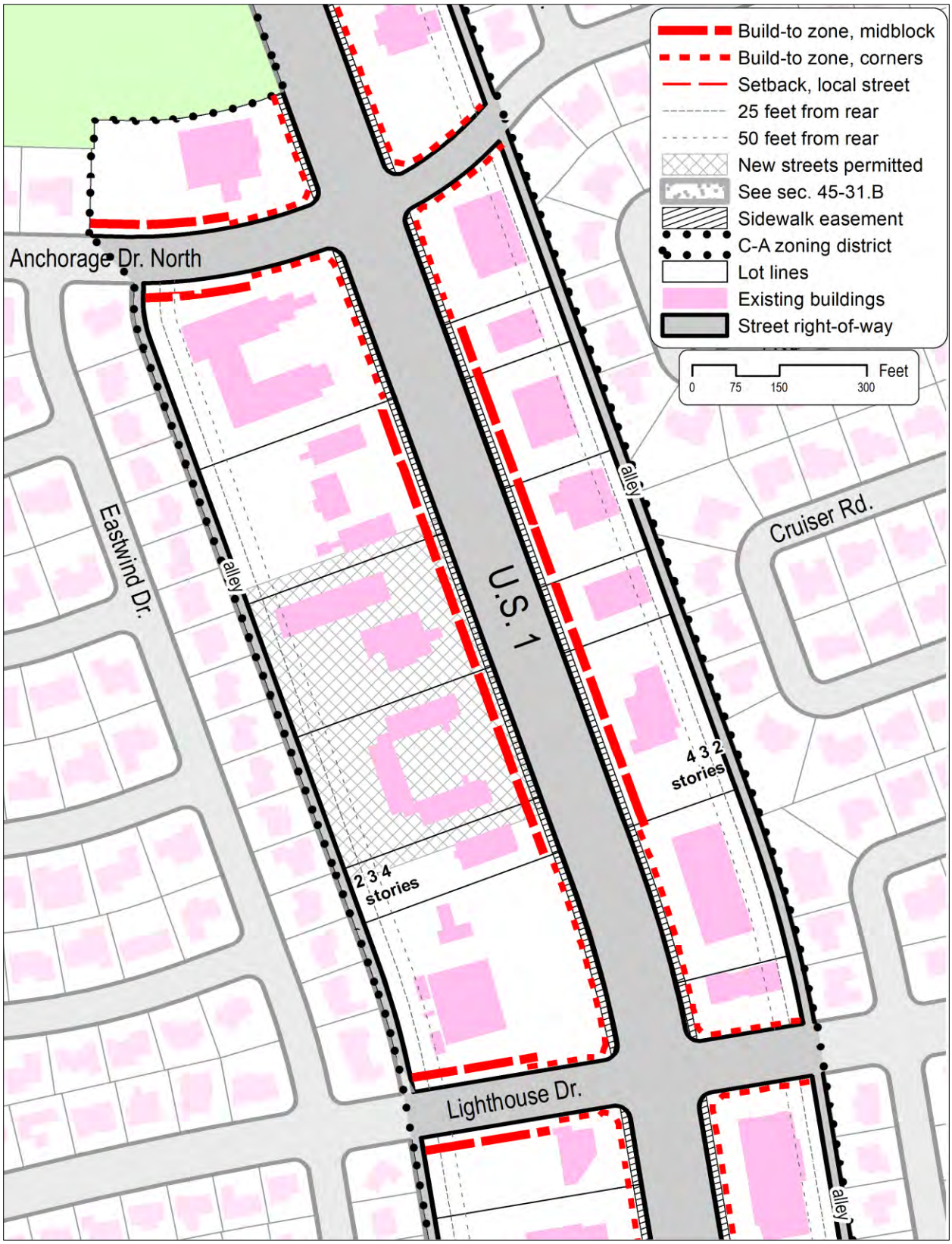

EXHIBIT 1 (C-A TO C-MU)

Figure 3 Regulating Plan, Lighthouse Dr. to Ebbtide Dr.

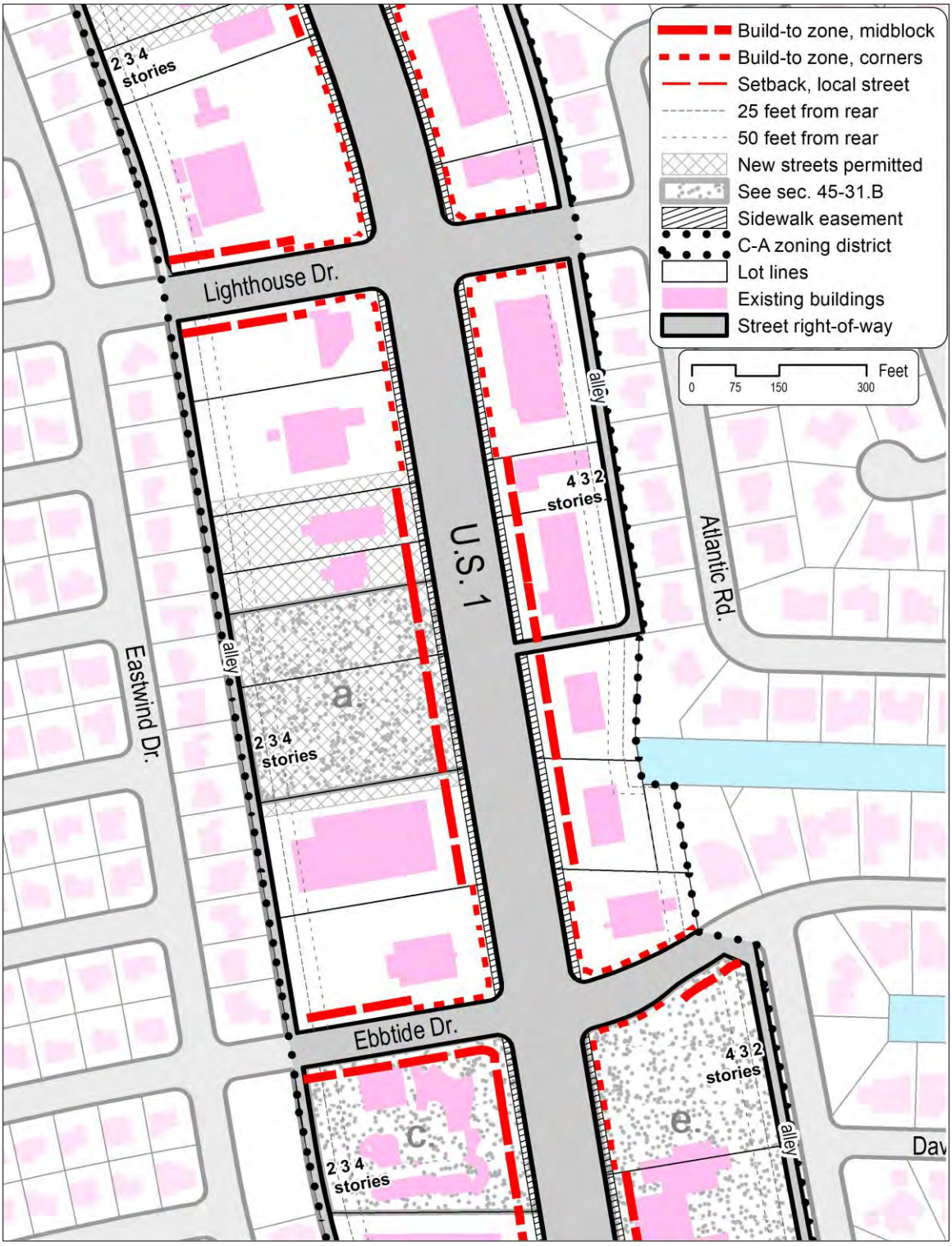

1

1 **Figure 4 Regulating Plan, Ebbtide Dr. to Earman River**

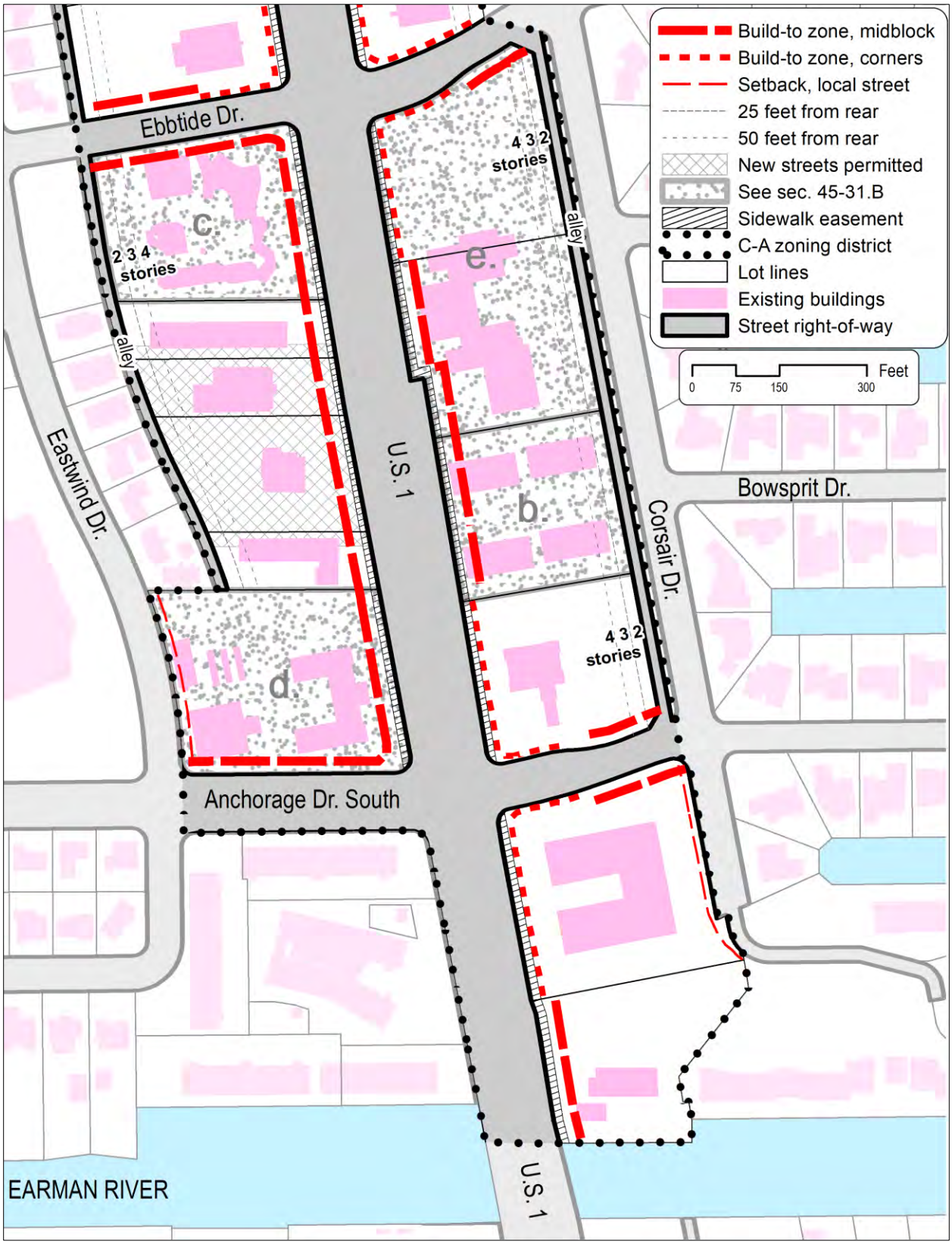

D. ***Building frontage types.***

1. The allowable building frontage types for each lot are determined by the designated street frontage for that lot.

a. Three types of street frontages are defined on the regulating plan for existing streets: Corner, Mid-block, or Local Street.

b. A landowner may select any of the allowable building frontage types shown on Table 2 for the street frontage shown on the regulating plan.

i) For lots with two street frontages, building frontages must be selected for each street frontage.

ii) A landowner with enough frontage on a street to accommodate two or more permitted building frontages may designate the corresponding building frontages for that street frontage.

iii) Regulations for each building frontage are summarized in Table 3 through 8.

c. Table 2 also shows a fourth street frontage, which applies only if a landowner chooses to construct a new street between US Highway 1 and the alley in the areas designated on the regulating plan; see subsection 45-31.G for details.

Table 2 Allowable Building Frontages For Each Street Frontage

	STREET FRONTAGE TYPES			
Building Frontage Types	CORNER	MID-BLOCK	LOCAL STREET	NEW STREET
Gallery Frontage *(Table 3)*	●	●	○	●
Storefront Frontage *(Table 4)*	●	●	○	●
Forecourt Frontage *(Table 5)*	○	●	●	●[1]
Stoop Frontage *(Table 6)*	○	●	●	●[1]
Canopy Frontage *(Table 7)*	●	●	○	●
Lobby Frontage *(Table 8)*	○	●	●	●[1]

Key:
Building frontage permitted: ●
Building frontage not permitted: ○
Building frontage permitted beyond 150' from US Highway 1 only: ●[1]

2. Tables 3 through 8 summarize the regulations for each building frontage. Regulations that do not vary by building frontage type, such as permitted uses and building heights, are described throughout section 45-31.

Table 3 Building Frontage: GALLERY

A gallery is a roofed promenade extending along the wall of a building and supported by arches or columns on the outer side. A gallery shields space below like a canopy but provides usable space above, either private open space or fully enclosed space. Depending on its design, a gallery can be an arcade, a colonnade, or a primarily decorative feature.

Gallery Plan

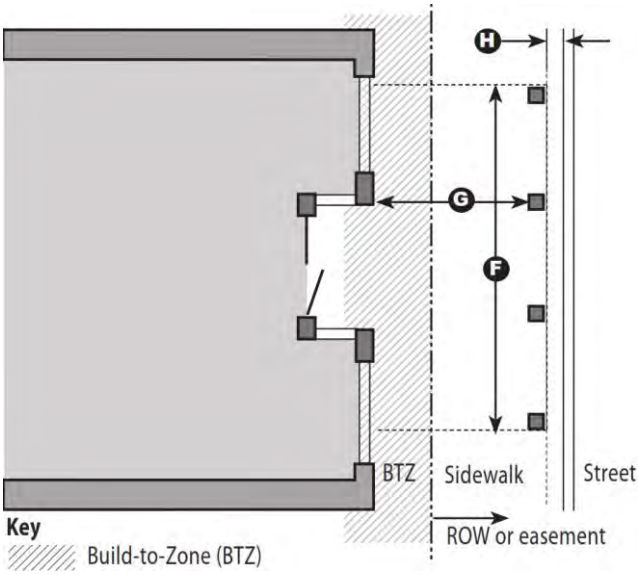

Gallery Cross-Section

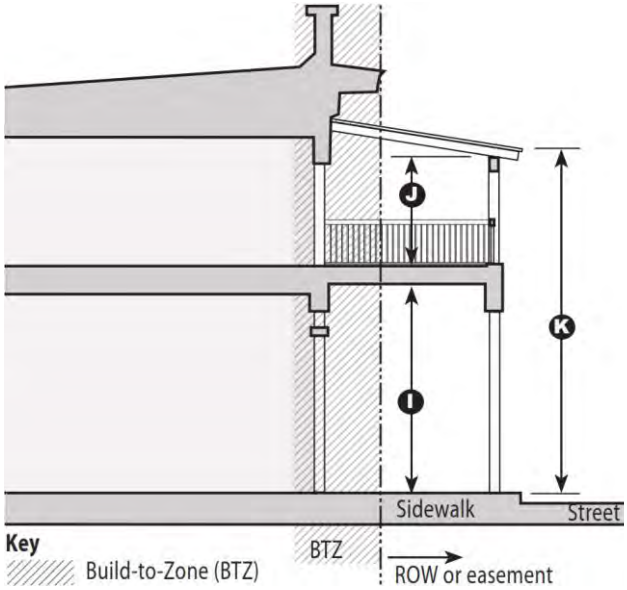

Setbacks	(see 45-31.E.1.a)		**Main Entrance**	(see 45-31.F.1)	
Build-to Zone	(see 45-31.E.1.b)		**Façade Transparency**	(see 45-31.F.2)	
Build-to zone:	0 min., 10' max.	**D, E**	Ground story:	30% min.	
Building Frontage Standards	(see 45-31.E.2)		Upper stories:	20% min.	
Percentage:	70% min.				
Building Height	(see 45-31.E.3)		**Encroachments**	(see 45-31.F.3)	
Floor and Ceiling Height	(see 45-31.E.4)		**Awnings**	(see 45-31.F.4)	
Landscape Standards	(see 45-31.E.5)		**Balconies**	(see 45-31.F.5)	
Streetscape Standards	(see 45-31.E.6)		**Bay Windows**	(see 45-31.F.6)	
			Parking Standards	(see 45-31.H)	

Gallery Dimensions					
Width:	10' min.	**F**	Ceiling height:	10' min. clear for ground story	**I**
Depth:	8' min. clear path for pedestrians	**G**		9' min. clear for upper story	**J**
Setback from curb:	2' min.; except 8' min. along US Highway 1	**H**	Overall height:	10' min., 40' max.	**K**
			Cumulative gallery width:	70% of building frontage	

EXHIBIT 1 (C-A TO C-MU)

Table 4 Building Frontage: STOREFRONT

A storefront is a flexible space at the sidewalk level that is directly accessible by pedestrians and suitable for retail sales. A storefront has a mostly transparent façade and a gallery, canopy, or awning that shades the storefront's windows and doors and the sidewalk.

Main entrances to each storefront open directly onto the sidewalk or onto a forecourt. Storefronts that are part of the storefront frontage type create the best pedestrian and retail experience.

Storefront Plan

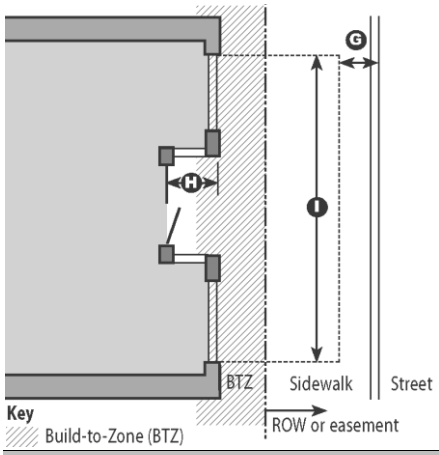

Storefront Cross-Section

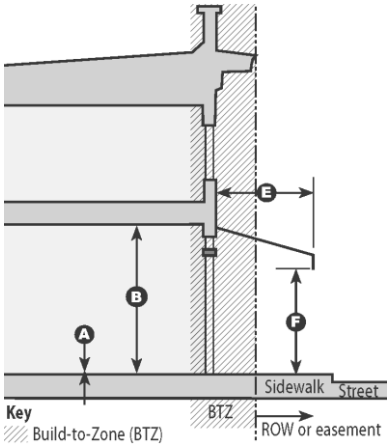

Storefront Front Elevation

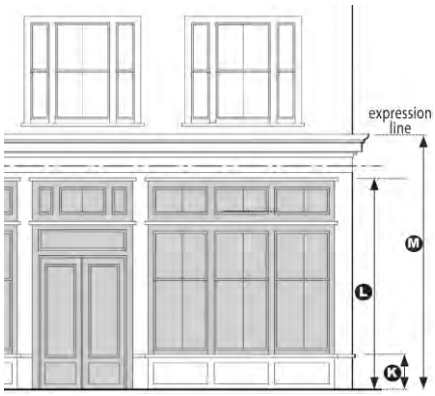

Setbacks	(see 45-31.E.1.a)	
Build-to Zone	(see 45-31.E.1.b)	
Build-to zone:	0' min., 5' max.	**D, E**
Building Frontage Standards	(see 45-31.E.2)	
Percentage:	60% min.	
Building Height	(see 45-31.E.3)	
Floor and Ceiling Height	(see 45-31.E.4)	
Ground-story elevation:	.5' max.	**A**
Ground-story ceiling:	12' min., 16' max.	**B**
Landscape Standards	(see 45-31.E.5)	
Streetscape Standards	(see 45-31.E.6)	

Main Entrance	(see 45-31.F.1)	
Façade Transparency	(see 45-31.F.2)	
Ground story:	70% min.	
Upper stories:	40% min.	
Encroachments	(see 45-31.F.3)	
Awnings	(see 45-31.F.4)	
Balconies	(see 45-31.F.5)	
Bay Windows	(see 45-31.F.6)	
Parking Standards	(see 45-31.H)	

Storefront Dimensions		
Cover depth:	4' min.	**E**
Cover height:	10' min. clear	**F**
Setback from curb:	2' min.; except 8' min. along US Highway 1	**G**
Door recess:	5' max.	**H**
Cumulative storefront width:	70% of building frontage min.	**I**
Door intervals:	No more than 50' apart	
Window sill height:	1' min., 3' max.	**K**
Top of windows:	8' min.	**L**
Expression line:	10' min. and below second story	**M**

1

Table 5 Building Frontage: FORECOURT

A forecourt is a small private open space that is open to the sidewalk and bounded on two or three sides by the exterior walls of buildings.

Although forecourts are allowed on most building frontages, one or more forecourts are dominant features on the façade in the forecourt building frontage.

Forecourt Plan

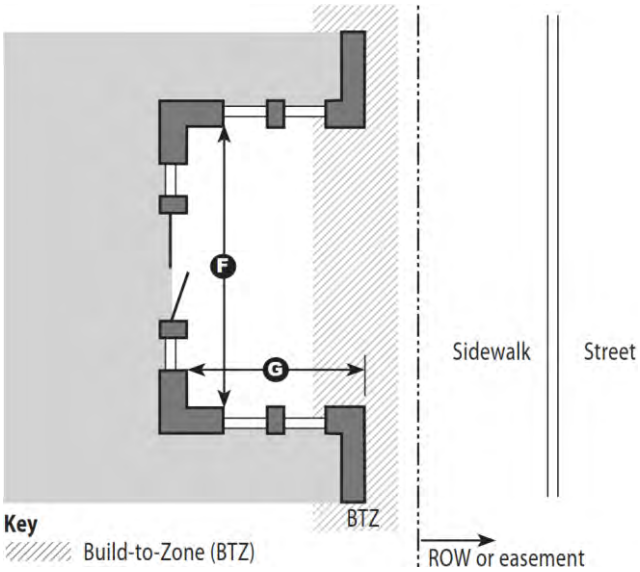

Forecourt Cross-Section

Setbacks	(see 45-31.E.1.a)	
Build-to Zone	(see 45-31.E.1.b)	
Build-to zone:	5' min., 20' max.	**D**
Building Frontage Standards	(see 45-31.E.2)	
Percentage:	60% min.	
Building Height	(see 45-31.E.3)	
Floor and Ceiling Height	(see 45-31.E.4)	
Landscape Standards	(see 45-31.E.5)	
Streetscape Standards	(see 45-31.E.6)	
Forecourt Dimensions		
Width of individual forecourts:	15' min.	**F**
Depth:	10' min., 40' max.	**G**
Width of combined forecourts:	10' min., 40% max. of building frontage	

Main Entrance	(see 45-31.F.1)	
Façade Transparency	(see 45-31.F.2)	
Ground story:	30% min.	
Upper stories:	20% min.	
Encroachments	(see 45-31.F.3)	
Awnings	(see 45-31.F.4)	
Balconies	(see 45-31.F.5)	
Bay Windows	(see 45-31.F.6)	
Parking Standards	(see 45-31.H)	
Review Procedures	(see 45-31.I)	

1

Table 6 Building Frontage: STOOP

Stoops are staircases and elevated entrance platforms that lead to main entrances.	Stoops are generally taller than porches to match the higher ground-story floors that are needed to maintain privacy in urban areas.

Stoop Plan

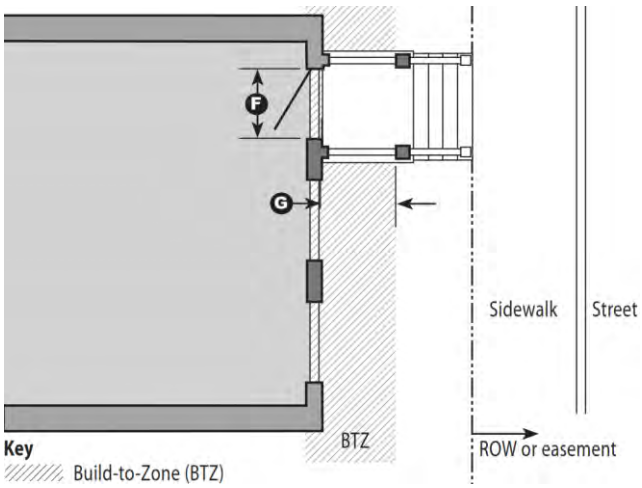

Stoop Cross-Section

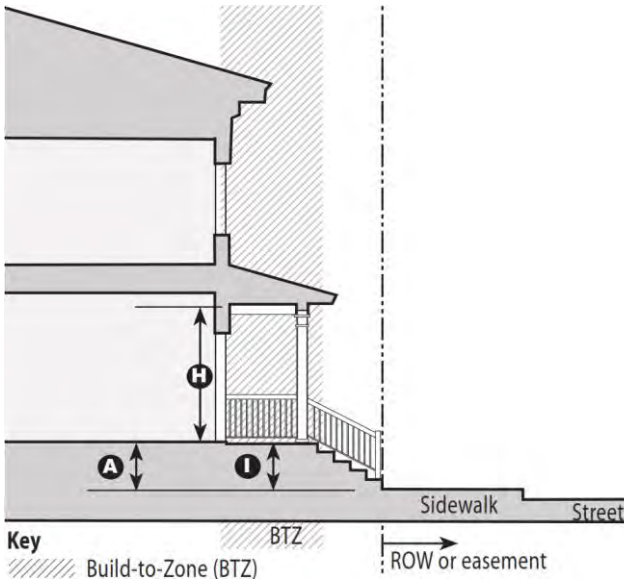

Setbacks	(see 45-31.E.1.a)	
Build-to Zone	(see 45-31.E.1.b)	
Build-to zone:	5' min., 20' max.	**D**
Building Frontage Standards	(see 45-31.E.2)	
Percentage:	60% min.	
Building Height	(see 45-31.E.3)	
Floor and Ceiling Height	(see 45-31.E.4)	
Ground-story	3' min.	**A**
Landscape Standards	(see 45-31.E.5)	
Streetscape Standards	(see 45-31.E.6)	
Stoop Dimensions		
Spacing of stoops:	28' on center (average)	
Width:	5' min., 8' max.	**F**
Depth:	5' min., 8' max.	**G**
Ceiling height:	8' min.	**H**
Elevation:	3' min. above sidewalk	**I**

Main Entrance	(see 45-31.F.1)	
Façade Transparency	(see 45-31.F.2)	
Ground story:	20% min.	
Upper stories:	20% min.	
Encroachments	(see 45-31.F.3)	
Awnings	(see 45-31.F.4)	
Balconies	(see 45-31.F.5)	
Bay Windows	(see 45-31.F.6)	
Parking Standards	(see 45-31.H)	
Review Procedures	(see 45-31.I)	

1

Table 7 Building Frontage: CANOPY

A canopy frontage contains a permanently attached rigid canopy that projects outward from the façade to shield the main entrance, windows, and sidewalk from the elements.

Canopy Plan

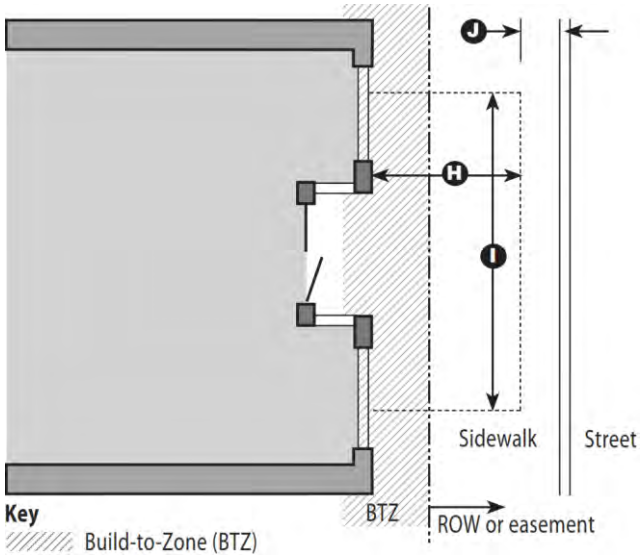

Canopy Cross-Section

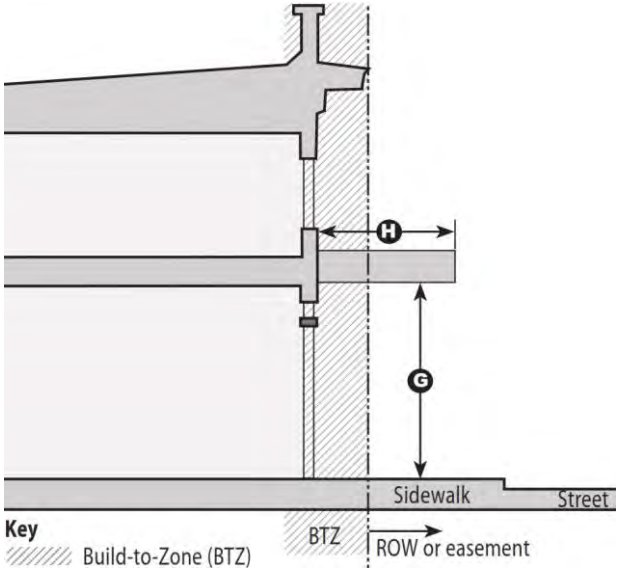

Setbacks	(see 45-31.E.1.a)	
Build-to Zone	(see 45-31.E.1.b)	
Build-to zone:	0' min., 10' max.	**D, E**
Building Frontage Standards	(see 45-31.E.2)	
Percentage:	60% min.	
Building Height	(see 45-31.E.3)	
Floor and Ceiling Height	(see 45-31.E.4)	
Landscape Standards	(see 45-31.E.5)	
Streetscape Standards	(see 45-31.E.6)	
Canopy Dimensions		
Height:	10' min. clear	**G**
Depth:	8' min.	**H**
Cumulative width:	60% min. of building frontage	**I**
Setback from curb:	2' min.; except 8' min. along US Highway 1	**J**

Main Entrance	(see 45-31.F.1)	
Façade Transparency	(see 45-31.F.2)	
Ground story:	30% min.	
Upper stories:	20% min.	
Encroachments	(see 45-31.F.3)	
Awnings	(see 45-31.F.4)	
Balconies	(see 45-31.F.5)	
Bay Windows	(see 45-31.F.6)	
Parking Standards	(see 45-31.H)	
Review Procedures	(see 45-31.I)	

1

Table 8 Building Frontage: LOBBY

Lobby frontages provide one or more prominent entrances to internal lobbies that are visible from the street and sidewalk.

Lobby Plan (Indented)

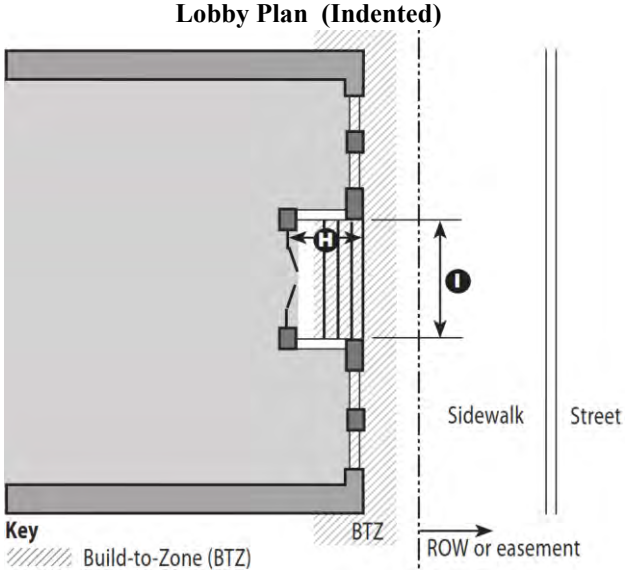

Lobby Plan (Extended)

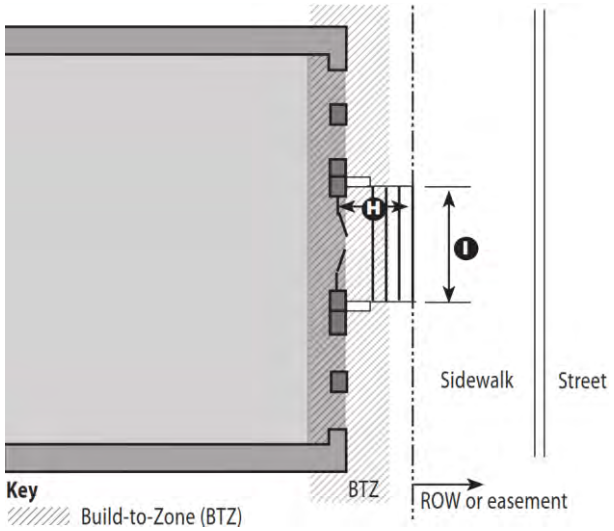

Setbacks	(see 45-31.E.1.a)	
Build-to Zone	(see 45-31.E.1.b)	
Build-to zone:	5' min., 20' max.	**D**
Building Frontage Standards	(see 45-31.E.2)	
Percentage:	60% min.	
Building Height	(see 45-31.E.3)	
Floor and Ceiling Height	(see 45-31.E.4)	
Landscape Standards	(see 45-31.E.5)	
Streetscape Standards	(see 45-31.E.6)	
Dimensions of Lobby Entrances		
Depth:	10' min., 15' max.	**H**
Width:	10' min., 30' max.	**I**

Main Entrance	(see 45-31.F.1)	
Façade Transparency	(see 45-31.F.2)	
Ground story:	30% min.	
Upper stories:	20% min.	
Encroachments	(see 45-31.F.3)	
Awnings	(see 45-31.F.4)	
Balconies	(see 45-31.F.5)	
Bay Windows	(see 45-31.F.6)	
Parking Standards	(see 45-31.H)	
Review Procedures	(see 45-31.I)	

1

E. ~~*Building*~~ ***Site*** ~~*area regulations.*~~ ***and bulk standards.***

1. ***Setbacks and build-to zones.***

a. ***Setbacks.*** Minimum setbacks between buildings and side, rear, and Local Street front lot lines are illustrated on Figure 5 and established as follows:

i) ***Side setbacks*** ("A") are 0 feet

ii) ***Rear setbacks*** ("B") are 0 feet (measured from the new easement for lots located along alleys).

iii) ***Local Street front setbacks*** ("C") are 15 feet

b. ***Build-to zone.*** A build-to zone is specified for each frontage type; see Tables 3 through 8. The build-to zone is parallel to the street frontage and is measured from the front lot line, except along US Highway 1 where it is measured from the new sidewalk easement which is required by subsection 45-31.G. Figure 5 shows build-to zones as "D" for mid-block lots and as "E" for corner lots and lots facing new streets. A portion of a building's facade that faces that street frontage must be placed within the specified build-to zone (see explanation in subsection 45-31.E.2).

i) For properties facing New Streets as defined in subsection 45-31.G, build-to zones ("D" and "E") are measured from the outer edges of the new sidewalks (see Figure 12).

ii) Allowable encroachments beyond the build-to zone are specified in subsection 45-31.F.3.

iii) For properties facing Local Streets, the front setback ("C") shall be observed instead of the build-to zone.

Figure 5 Setbacks and Build-To Zones

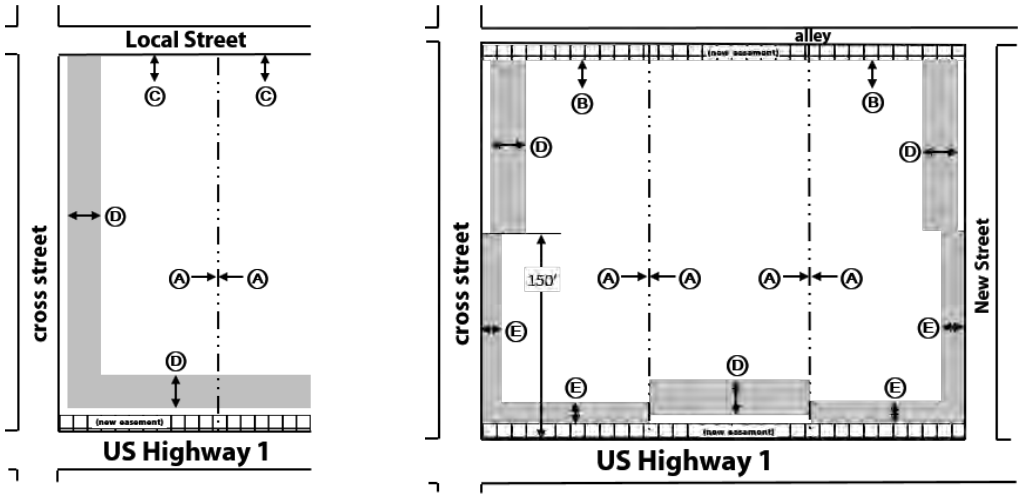

1. ~~*Minimum building lot size.* The minimum lot of building site area for each commercial building shall be sixteen thousand (16,000) square feet and have a width of not less than eighty (80) feet measured at the front and rear lot lines and at the front building line.~~

2. ~~*Maximum lot coverage.* Main and accessory buildings shall cover no more than thirty-five (35) percent of the total lot area.~~

3. ~~*Minimum lot coverage.* No main and accessory buildings shall be constructed that would occupy less than ten (10) percent of the total lot area or two thousand (2,000) square feet, whichever is greater.~~

~~F. ***Yards.***~~

1. ~~***Front yards.*** All buildings facing U.S. [Highway No.] 1 shall set back from the right-of-way to provide a front yard of not less than seventy (70) feet. All buildings shall [be] set back from the rights-of-way of streets which intersect with U.S. [Highway No.] 1 providing a yard of not less than twenty-five (25) feet.~~

2. ~~***Side yards.*** All buildings less than twenty-five (25) feet in height or two (2) stories in height shall [be] set back from side lot lines so as to provide side yards of not less than twenty (20) feet.~~

   ~~All buildings three (3) stories in height shall [be] set back from side lot lines so as to provide side yards of not less than twenty-five (25) feet.~~

   ~~All buildings four (4) stories in height shall [be] set back from side lot lines so as to provide side yards of not less than thirty (30) feet.~~

3. ~~***Rear yard.*** All buildings less than twenty-five (25) feet in height or two (2) stories in height shall be set back from the rear lot line so as to provide a rear yard of not less than thirty (30) feet.~~

   ~~All buildings three (3) stories in height shall [be] set back from the rear lot line so as to provide a rear yard of not less than thirty-five (35) feet.~~

   ~~All buildings four (4) stories in height shall [be] set back from the rear lot line so as to provide a rear yard of not less than forty (40) feet.~~

2. ***Building frontage standards.*** The portion of a new building's façade that is located in the build-to zone is called the building frontage. The width of the building frontage must comply with the building frontage percentage standards for each building frontage type (see Tables 3 through 8).

a. Building frontage percentages are calculated by dividing the width of a building or buildings lying within the build-to zone (A) by the width of the lot along the same street frontage (B), as shown in Figure 6.

b. Minimum building frontage percentages are specified for each building frontage type in Tables 3 through 8.

i) If two building frontage types are used on a wide street frontage, the specified percentages are measured for each type.

ii) When buildings are being added or expanded, waivers may be requested in response to specific site limitations.

c. For certain architectural features described in this code, a portion of a building's facade that lies outside the build-to zone may be counted as building frontage. Examples are forecourts or lobby entrances that comply with the standards in Tables 5 or 8.

d. For properties with multiple street frontages, see Figure 5.

Figure 6 Building Frontage Percentages

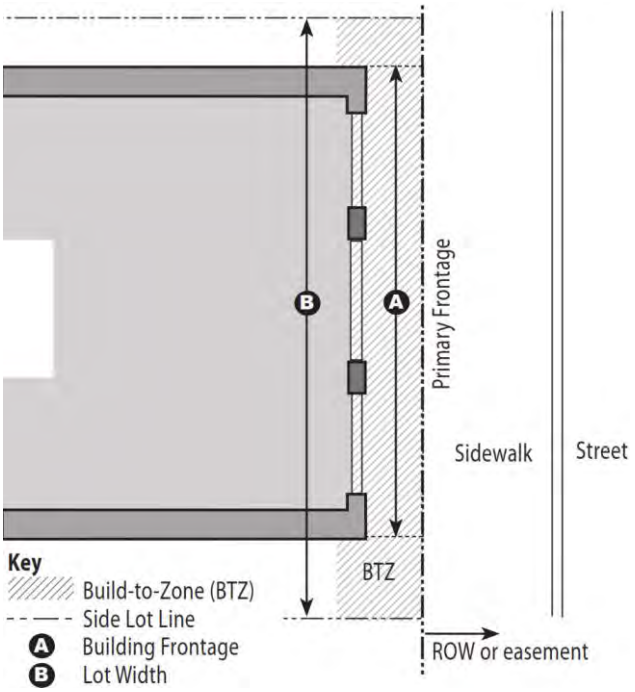

3. ***Density.*** Residential density in the C-MU zoning district may not exceed 24 units per acre. The acreage in this formula is the total area enclosed by the lot lines of the site being developed, including existing easements and including any land being dedicated for additional right-of-way or easements. The residential density of a mixed-use development in the C-MU zoning district shall be increased from 24 to 36 units per acre provided a development is consistent with the workforce housing density bonus granted by Policy 1.B.2 in the Comprehensive Plan.

4. ***Building height.***

a. Buildings may be up to 4 stories tall in the C-MU zoning district, except that:

i) Within 25 feet of the rear property line, no portion of a building may exceed 2 stories.

ii) Within 50 feet of the rear property line, no portion of a building may exceed 3 stories.

iii) The 25-foot and 50-foot restrictions are depicted on the regulating plan.

iv) A waiver to allow 5 stories rather than 4 stories may be requested on land north of Anchorage Drive North only.

b. For the purpose of calculating the number of stories in a building, stories shall be defined as the space between finished floor and finished ceiling, adjusted as follows:

i) Each level devoted to parking is considered as individual story when calculating the number of stories in a building, except where parking levels are screened by other rooms in the same building or screened by a liner building that is at least two stories tall with rooms at least 20 feet deep.

ii) When parking levels are constructed on a slope or are connected by sloping or circular ramps, the number of stories will be based on the non-sloped area. If there are no non-sloped areas, the number of stories will be counted as the highest parking level plus each parking level below.

iii) A mezzanine will not count towards the number of stories provided that the total area of mezzanine level is less than 40 percent of the floor area of the main story below.

iv) Buildings may include a partial story above the maximum number of stories otherwise allowed provided the floor area of the partial story is less than 30% of the floor area of the story below. Developers are encouraged to utilize this allowance on portions of buildings that are closest to street intersections and for architectural features such as towers or cupolas.

v) Rooftop gardens, pools, restaurants or cocktail lounges are permitted. All rooftop facilities shall be sufficiently screened from the street and adjacent properties. Adequate trees, shrubs, or greenspace shall be provided on any active rooftop facility. Only portions of the rooftop that are enclosed will count as a partial building story. A waiver may be granted to allow a rooftop restaurant or cocktail lounge to exceed the 30% partial story allowance in 45-31 (4) (b) (iv).

c. The maximum height of a building in feet is controlled by the maximum ceiling heights for individual stories, as provided in subsection 45-31.E.5.

~~*D. Building height regulations.* No building or structure shall exceed four (4) stories or forty-four (44) feet. Elevator towers and mechanical apparatus are not restricted to the forty-four-foot limit.~~5.

5. *Floor and ceiling height.*

a. This code provides standards for the elevation of certain ground-story floors and minimum/maximum dimensions for ceiling heights. Figure 7 and Table 9 illustrate how these standards are measured:

(i) Floor elevations are measured from the existing or anticipated sidewalk to the top of the finished floor of the ground story.

(ii) Ceiling heights are measured from the top of the finished floor to the underside of the tallest finished ceiling of each story; see exceptions in subsection b.

Figure 7 Floor and Ceiling Measurements

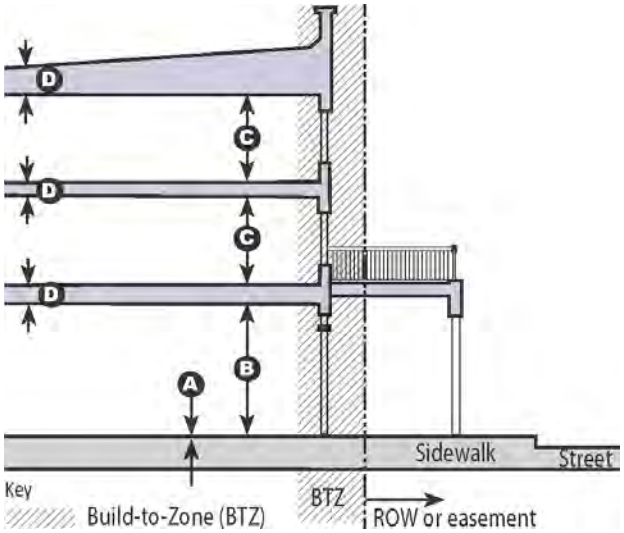

Table 9 Floor and Ceiling Standards

	Min.	Max.	Key
Elevation of ground-story floor above sidewalk:			
Storefront only	no min.	0.5'	**A**
Stoop only	3'	no max.	**A**
All other building frontage types	no min.	no max.	**A**
Height of ground-story ceiling:			
Storefront only	12'	16'	**B**
All other building frontage types	9'	14'	**B**
Height of upper-story ceilings:	9'	12'	**C**
Space between ceiling and floor above	no min.	4'	**D**

b. ***Ceiling height exceptions.*** The minimum and maximum ceiling height standards in Table 9 do not apply in the following circumstances:

i) A story in or under a building that is devoted to parking is counted as a story when calculating the number of stories in a building, but does not need to comply with the minimum or maximum ceiling heights in Table 9.

ii) When the total area of mezzanine level is less than 40 percent of the floor area of the story below, the mezzanine

level does not need to comply with the minimum ceiling heights in Table 9.

iii) Individual rooms ~~without finished ceilings, such as utility or storage rooms,~~ do not need to comply with the minimum or maximum ceiling heights in Table 9 provided that the remainder of that story complies with the minimum and maximum heights.

6. ***Landscape standards.***

a. ***Landscaping required.*** Landscaping shall be required in the following areas as required by the village's landscaping requirements:

i) Miscellaneous landscape elements, as required in section 45-88;

ii) Off-street parking lots, as required in section 45-89;

iii) Site perimeters, as required in section 45-90; and

iv) Base of foundation, as required by section 45-91.

b. ***Special requirements for C-MU zoning district.*** The village's landscaping requirements contain certain special requirements for the C-MU zoning district:

i) Section 45-90 requires minimum buffer widths for site perimeters.

- These buffer widths do not apply in front of buildings that meet the standards for a gallery, storefront, or canopy building frontage type. See Table 45-90.
- Along US Highway 1, buffer strips in front yards may not be planted on a sidewalk easement. See section 45-34.1.G.

ii) Section 45-91 requires landscaped areas around the base of foundations. This requirement does not apply in front of buildings that meet the standards for a gallery, storefront, or canopy building frontage type.

F. ***Architectural features***. Requirements are provided below for the location of a building's main entrance and the percentage of transparent openings on its façade. Allowances are then provided for certain architectural elements that may encroach into setbacks and build-to zones and in some cases over rights-of-way.

1. ***Main entrance.***

a. A building's main entrance is its principal point of access for pedestrians. All buildings must have their main entrance facing a street frontage, or a courtyard or forecourt that is entered from a street frontage. Additional entrances are encouraged.

b. Buildings fronting on two streets must have a pedestrian entrance on both streets.

c. Additional rules for storefront doors are provided in Table 4.

2. ***Façade transparency.***

a. Transparency means the amount of transparent window glass or other openings in a building's facade along a street frontage, relative to the overall surface area of the façade. This ratio is expressed as a percentage and is calculated separately for the ground story of a façade and for each upper story.

b. Building façades along a street frontage must meet the minimum façade transparency requirements in Table 10 to provide natural surveillance of sidewalks and streets, to provide interior daylight, and to allow clear views into storefronts.

c. Façade transparency percentages are calculated for the area between the finished floor and finished ceiling of each story along each street frontage; see Figure 8. For the purposes of these measurements:

i) Glazed windows and doors with tinted glass or applied films will be considered transparent if they transmit at least 50% of visible daylight.

ii) The transparent area of windows and doors includes rails and stiles as well as muntin bars and other separators within primarily glazed areas; but the transparent area excludes outer solid areas such as jambs, sills, and trim.

Table 10
Façade Transparency Percentages

Building Frontage	Ground Story	Each Upper Story
Gallery	30% min.	20% min.
Storefront	70% min.	40% min.
Forecourt	30% min.	20% min.
Stoop	20% min.	20% min.
Canopy	30% min.	20% min.
Lobby	30% min.	20% min.

Figure 8
Calculating Façade Transparency

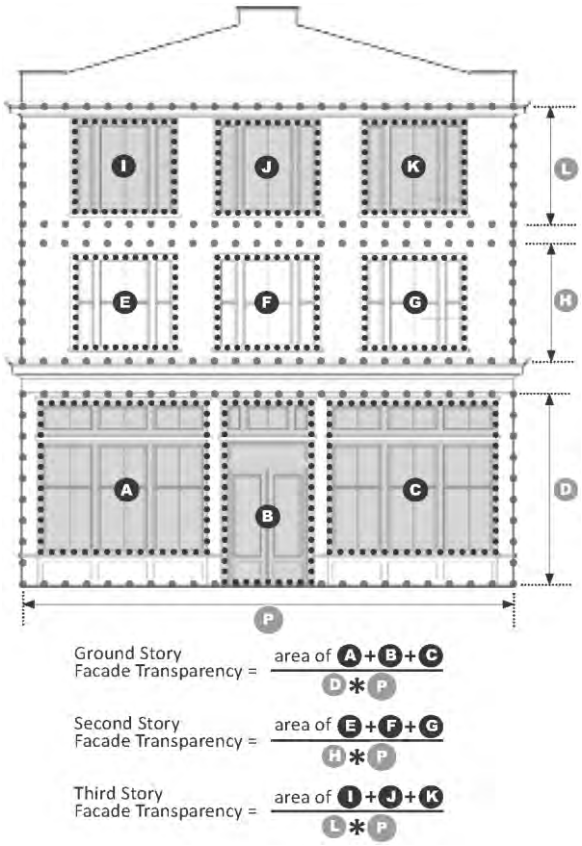

3. ***Encroachments***. Many architectural elements described in subsections 45-31.D and 45-31.F may project beyond the closest point to a property line where an exterior wall may be constructed. Table 11 identifies the allowable projections; the key column refers to Figure 5.

a. ***On private property.*** These elements may project into side or rear setbacks and project forward beyond the build-to zone including onto sidewalk easements to the extent permitted by Table 11 provided this code's requirements for each element are met.

b. ***On public property.*** Some of these elements may also extend horizontally over a public right-of-way in accordance with those regulations to the extent permitted by Table 11 provided this code's requirements for each element are met in addition to these general requirements:

i) Must maintain at least 10' of vertical clearance.

ii) Must meet any insurance or liability requirements established by the Village Attorney.

iii) Must obtain prior approval from the responsible entity for any encroachment over a right-of-way not maintained by the village, such as US Highway 1.

c. Sidewalk cafes with outdoor table service may be provided on public sidewalks when in compliance with all village codes.

Table 11 Encroachments

		Dimension	Key
Side (interior) (all features)		4' max. into side setback	**A**
Rear (all features)		4' max. into rear setback	**B**
Front (on private property facing a local street))		4' max. into front setback	**C**
Front (on private property facing all other streets)		no max. on private property	**D, E**
Front (on public property facing all other streets):			
Gallery	*(Table 3)*	up to 2' from curb; except up to 8' from curb along US Highway 1	**D, E**
Storefront cover	*(Table 4)*	up to 2' from curb; except up to 8' from curb along US Highway 1	**D, E**
Forecourt	*(Table 5)*	no encroachment allowed	**D, E**
Stoop	*(Table 6)*	no encroachment allowed	**D, E**
Canopy	*(Table 7)*	up to 2' from curb; except up to 8' from curb along US Highway 1	**D, E**
Lobby	*(Table 8)*	no encroachment allowed	**D, E**
Awning	*(45-31.F.4)*	up to 2' from curb; except up to 8' from curb along US Highway 1	**D, E**
Balcony	*(45-31.F.5)*	up to 2' from curb; except up to 8' from curb along US Highway 1	**D, E**
Bay window	*(45-31.F.6)*	up to 2' from curb (upper stories only); except up to 8' from curb along US Highway 1	**D, E**

4. ***Awnings.***

a. An awning is a flexible cover that projects outward from a building's exterior wall to shield a window, door, sidewalk, or other space below from the elements.

b. To encourage the construction of awnings, awnings are allowed to project horizontally beyond the closest point to a property line

where an exterior wall may be constructed, including over a public right-of-way. See subsection 45-31.F.3 for allowances and limitations on such encroachments. To qualify for these encroachments, the awning must meet the following requirements:

i) The depth of the awning from the face of the building must be at least 4 feet.

ii) The height of the awning from the sidewalk to the underside of the awning must be at least 10 feet.

iii) High-gloss or plasticized fabrics may not be used.

iv) Awnings may not be back-lit.

Table 12 Awning Dimensions

	Dimension	Key
Depth	4' min.	**E**
Height	10' min. clear	**F**

Figure 9 Awning

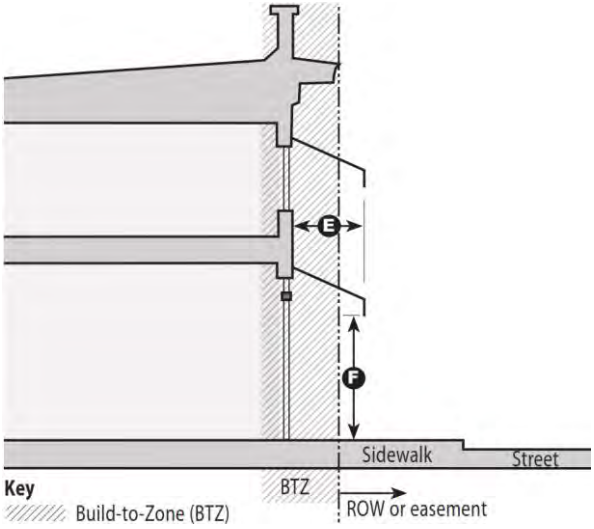

5. *Balconies.*

a. A balcony is an unenclosed private open space that typically projects outward from a building's exterior wall.

b. To encourage the construction of balconies, balconies are allowed to project horizontally beyond the closest point to a property line where an exterior wall may be constructed. Balconies in upper stories may also project horizontally over a public right-of-way. See subsection 45-31.F.3 for allowances and

limitations on such encroachments. To qualify for these encroachments, the balcony must meet the requirements in Table 13.

Table 13 Balcony Dimensions

	Dimension	Key
Depth	4' min.	**E**
Height	10' min. clear	**F**

Figure 10 Balcony

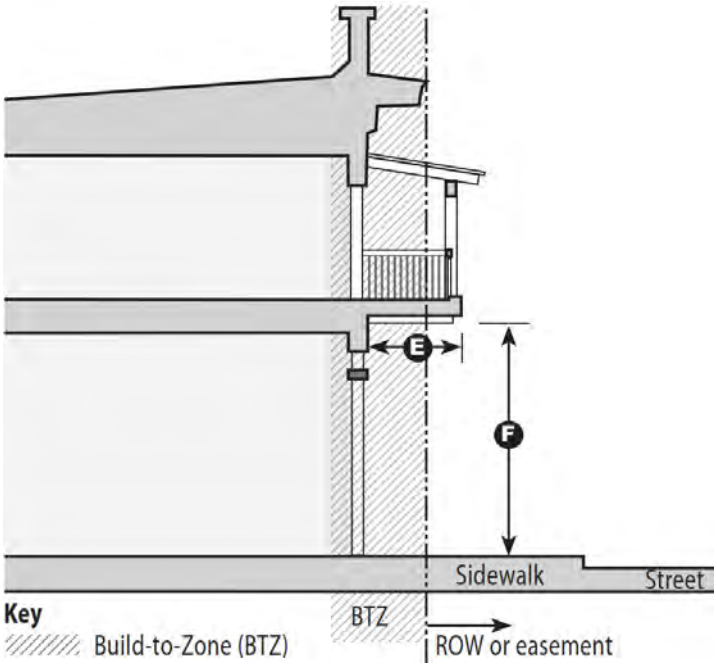

6. *Bay windows.*

a. A bay window creates interior space that projects outward from a building's exterior wall.

b. To encourage the construction of bay windows, bay windows are allowed to project horizontally beyond the closest point to a property line where an exterior wall may be constructed. Bay windows in upper stories may also project horizontally over a public right-of-way. See subsection 45-31.F.3 for allowances and limitations on such encroachments. To qualify for these encroachments, the balcony must meet the requirements in Table 14.

Table 14 Bay Window Dimensions

	Dimension	Key
Depth	4' min.	**E**
Height	2 stories max.	**F**

Figure 11 Bay Window

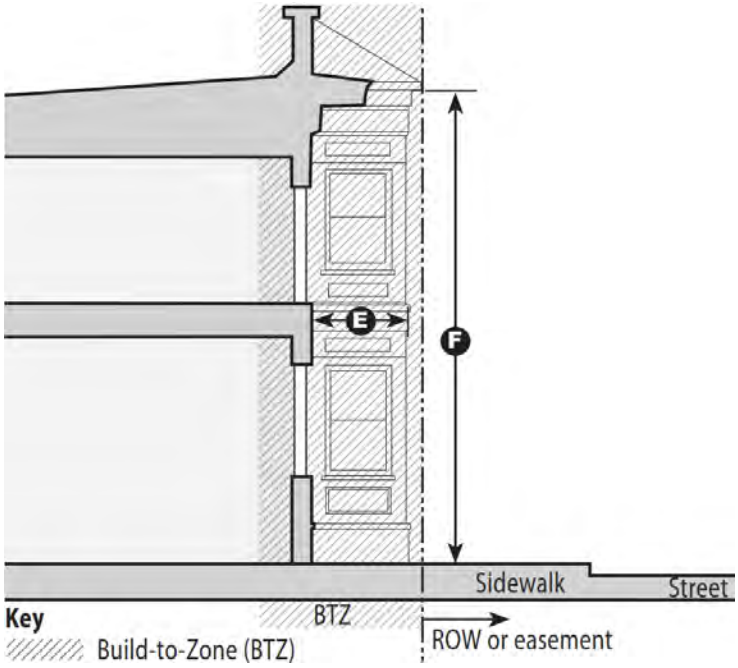

G. ***Street, alley, and easement standards.***

1. ***New streets.*** Landowners may choose to construct a new street between US Highway 1 and the alley in the areas designated on the regulating plan. The following standards apply to any such new streets:

a. ***Cross-section***. New streets shall be designed in accordance with Figure 12 and constructed by the developer concurrently with the development.

Figure 12

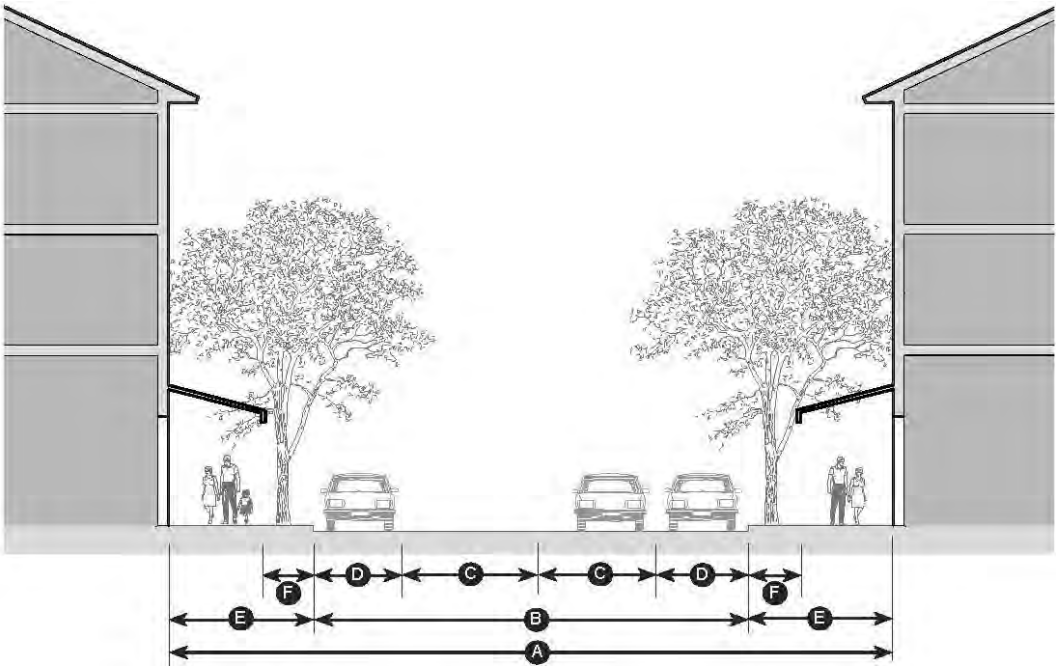

Description:	Details:	Key:
Width of right-of-way	60’	A
Movement type	Slow	
Target speed	25 mph	
Width of pavement	36’	B
Travel lanes	10’ travel lanes	C
Bicycle facilities	shared travel lanes	C
On-street parking	8’ parallel parking	D
Pedestrian facilities	12’ sidewalks	E
Furnishing strip:		F
Planter type	5’ by 5’ tree grates	
Tree spacing	30’ average	

b. ***Other design and construction standards.*** On subjects where Figure 12 does not provide design guidance, for instance driveway widths and curb radii at intersections, design shall be in accordance with NACTO's *Urban Street Design Guide*.

i) Pavement, subgrade, drainage, and utilities must meet construction specifications of the Village of North Palm Beach.

ii) The construction specifications for sidewalks in section 24-43 apply along new streets.

iii) Street trees must be planted and maintained on both sides of new streets.

iv) Where an Applicant demonstrates that an alternative street design achieves a better outcome, waivers may be granted from specific standards in Figure 12.

c. ***Ownership and maintenance.*** New streets shall be owned and maintained privately unless another entity acceptable to the Village of North Palm Beach accepts this responsibility. Irrespective of ownership and maintenance, landowners must guarantee perpetual public access to new streets in a form suitable to the Village Attorney.

d. ***Build-to zones.*** Build-to zones for buildings facing a new street will be determined in accordance with subsection 45-31.E.1 irrespective of the new street's ownership.

e. ***Building frontage standards***. Building frontage standards for buildings facing a new street will be determined in accordance with subsection 45-31.E.2.

2. ***Existing alleys.*** The C-MU district is served by alleys on both sides of US Highway 1 that are essential for general circulation and for access for services. To protect and enhance these functions, the following standards apply during the development process to all properties that abut an existing alley:

a. A 7-foot perpetual transportation and utility easement must be dedicated to the village along the alley, in a form acceptable to the Village Attorney.

b. Setbacks for buildings along alleys are specified in subsection 45-31.E.1.

c. Setbacks for surface parking along alleys are specified in Table 15 (subsection 45-31.H).

d. The 5-foot landscaped strip required by section 45-90 must be planted and maintained adjoining the new easement.

e. Refuse containers and other service or utility equipment must meet the same setbacks as for surface parking. Refuse container areas must be screened in accordance with section 45-88.

3. ***Sidewalk easements.*** All properties in the C-MU district abut US Highway 1, a regional highway that also serves local travelers in vehicles, on foot or bike, or using public transit. To enhance non-vehicular travel along this corridor, the following standards apply during the development process:

a. A 7-foot perpetual sidewalk easement must be dedicated to the village along the US Highway 1 frontage, in a form acceptable to the Village Attorney.

b. This easement must be paved at the time of development to the same elevation as the adjoining sidewalk in accordance with the construction specifications in section 24-43.

c. The landscape strip required by section 45-90 must be planted and maintained on the remainder of the property beyond the sidewalk easement, except that no trees are required in this strip.

H. ~~G. *Off-street*~~ ***Parking standards.*** ~~*and loading regulations.*~~

1. ***Location of parking lots.*** Surface parking lots must be set back from streets at least the distances provided in Table 15, as illustrated in Figure 13.

Figure 13 Setbacks for Surface Parking Lots

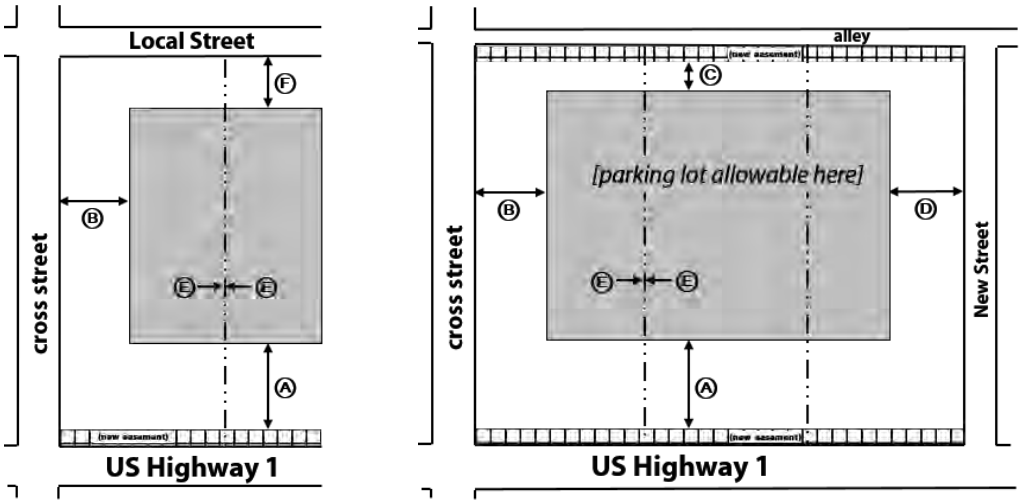

Table 15 Setbacks for Surface Parking Lots

Parking lot setback, US Highway 1	50' min.	**A**
Parking lot setback, cross street	30' min.	**B**
Parking lot setback, alley	5' min.	**C**
Parking lot setback, New Street	30' min.	**D**
Parking lot setback, side lot lines	0' min.	**E**
Parking lot setback, Local Street	30' min.	**F**

~~1. Off-street parking shall be either on the same lot or within two hundred (200) feet of the building it is intended to serve measured from the nearest point of the building to the nearest point of the off-street parking lot, without crossing any major thoroughfare.~~

~~2. Any area once designated as required off-street parking shall not be changed to any other use unless and until equal facilities are provided elsewhere.~~

~~3. Off-street parking existing at the effective date of these regulations in connection with the operation of an existing building or use shall not be reduced to an amount less than hereinafter required for a similar new building or use.~~

~~4. Two (2) or more buildings or uses may collectively provide the required off-street parking, in which case the required number of parking spaces shall be not less than the sum of the requirements for the several individual uses computed separately.~~

~~5. The required off-street parking shall be for occupants, employees, visitors, patrons and shall be limited in use to motor vehicles. The storage of merchandise, motor vehicles for sale, or the repair of vehicles is prohibited.~~

2. ***Parking space ratios.*** Properties will retain the existing parking ratios as of the date of adoption of the CMU District, which are listed in Table 16 B. In order for properties to be granted the mixed-use district parking ratios listed in 16A, a property must be made considerably closer to the CMU requirements adopted in 2020, as outlined in Section 45-64 (4), or be an entirely new development. The ratios listed in Tables 16A and 16B establish the minimum number of on-site parking spaces unless adjusted as provided in subsection 3. Ratios based on square feet refer to the gross floor area.

Table 16.A Parking Space Ratios

PROPOSED USE	PARKING SPACE RATIO
RESIDENTIAL USES	
Mobile home park	(not permitted)
Dwelling, one family detached	(not permitted)
Dwelling, all other dwelling types	1.25 per unit
Live/work unit	1 per 1,000 sq. feet
Assisted living facility	0.5 per resident
Community residential home	0.5 per resident
LODGING USES	
Bed-and-breakfast establishment	1 per guest room

Hotel[1]	1 per guest room
Motel	1 per guest room
Time-share unit	1.25 per unit
BUSINESS USES	
Offices, general	2 per 1,000 sq. feet
Office or clinic, medical or dental	3 per 1,000 sq. feet
Stores & services, general	2 per 1,000 sq. feet
Stores & services, large format	3 per 1,000 sq. feet
Adult entertainment	(not permitted)
Convenience store with fuel	5 per 1,000 sq. feet
Dog daycare	3 per 1,000 sq. feet
Drive-through facility (for any use)	---
Garage, parking	---
Heavy commercial and light industrial:	(not permitted)
Contractor and trade operation	(not permitted)
Vehicle sales or repair	(not permitted)
All other	(not permitted)
Medical marijuana treatment center	(not permitted)
Restaurant or cocktail lounge	10 per 1,000 sq. feet
Telecommunications antennas	---
CIVIC & EDUCATION USES	
Child care facility[2]	1 per 12 students
Church or place of assembly	1 per 4 peak attendees
Civic space	---
Family day care	(no additional parking)
Government building	2 per 1,000 sq. feet
Hospital or medical center	(not permitted)
Public space	---
School, public or private	1 per 12 students

[1] Hotels with banquet or conference facilities, restaurants, or bars that are open to the public shall provide a parking demand study and provide sufficient spaces for visitors and employees.

[2] A sufficient loading zone shall be provided to accommodate peak drop off and pick up

Table 16.B Parking Spaces Required

Uses	**Parking Spaces Required**
Banks; business or professional offices excluding doctors and dentists	One (1) per three hundred (300) square feet of usable floor area, plus one (1) per each three (3) employees
Barbershop or beauty shop	Two (2) per barber or three (3) per beautician based on the design capacity of the structure
Churches	One (1) per four (4) seats; or one (1) per thirty (30) square feet of usable floor area of auditorium, whichever is greater

EXHIBIT 1 (C-A TO C-MU)

Country club	One (1) per five (5) members
Restaurants and cocktail lounges where food and drink may be consumed on the premises only and where eating and serving areas are entirely contained within the building, not including drive-in hamburger, ice cream, soft drink, or other drive-in and/or carry-out eating establishments	One (1) space for each seventy-five (75) square feet of area devoted to patron use, or one (1) space per three (3) fixed seats, whichever is the greater, plus one (1) space for each one and one-half (1½) projected employees who would be actually working during peak employment hours.
Hotels, motels and tourist courts	Three (3) spaces, plus an additional space for each guest bedroom, plus an additional space for each fifteen (15) rooms or portions thereof. For example, a fifteen-room motel would need nineteen (19) parking spaces
Marina	Two (2) for each three (3) boat mooring or storage space, boat for rent, as based on the design capacity of the facility. If public boat launching facilities are provided, the parking spaces shall be increased fifty (50) percent of that number as computed above
Medical and dental clinics; doctors and dentists offices	One (1) space for each one hundred fifty (150) square feet of floor area up to three thousand (3,000); one (1) additional space for each additional two hundred (200) square feet up to five thousand (5,000); one (1) additional space for each additional two hundred fifty (250) square feet over five thousand (5,000)
Mortuaries or funeral parlors	Five (5) spaces per parlor or chapel unit; or one (1) per four (4) seats, whichever is greater
Private clubs, lodge or union headquarters	One (1) per three (3) members based on the maximum design capacity of the facility
Retail stores and personal service establishments except as otherwise specified herein	One (1) per two hundred (200) square feet of retail floor space
Shopping centers containing five (5) or more stores, or fifteen thousand (15,000) square feet of building	There shall be a ratio of four (4) square feet of parking (including driveways required for ingress and egress and circulation) to each one (1) square foot of retail floor space
Time shares	Off-street parking regulations. For each time-share unit structure, there shall be provided two (2) or more parking spaces measuring at least nine (9) feet by eighteen (18) feet (one hundred sixty-two (162) square feet) each, in accordance with the following formula: Two (2) such spaces shall be provided for each dwelling unit containing not more than two (2) bedrooms, and two and one-half (2½) of such spaces shall be provided for each dwelling unit containing three (3) or more bedrooms, with the provision that for an uneven number of units, the fractional space result produced by the application of such formula shall count as a full space; provided, however, that in multiple-family dwellings containing more than thirty (30) dwellings units, for each dwelling units in excess of thirty (30) units and up to sixty (60) units one (1) such space shall be provided for each dwelling unit containing not more than two (2) bedrooms, and for each dwelling unit in excess of sixty

	(60) dwelling units one and one-half (1½) such spaces shall be provided for each dwelling unit containing not more than two (2) bedrooms, and two and one-half (2½) of such spaces shall be provided for each dwelling unit containing three (3) or more bedrooms, with the provision that for an uneven number of units, the fractional space result produced by the application of such formula shall count as a full space (For examples: Thirty (30) dwellings units containing two (2) bedrooms each shall require sixty (60) off-street parking spaces; sixty (60) dwelling units containing two (2) bedrooms each shall require ninety (90) off-street parking spaces; and ninety (90) dwelling units containing two (2) bedrooms each shall require one hundred thirty-five (135) off-street parking spaces).
Auditoriums and places of assembly without fixed seats	One (1) per three (3) people based on the maximum design capacity of the structure
Veterinary establishments	Five (5) spaces per veterinarian based on the maximum design capacity of the facility or five (5) spaces for every four hundred (400) square feet of usable floor space, whichever is greater

3. ***Parking space adjustments.*** The number of on-site parking spaces calculated using Table 16a shall be adjusted under any one or more of the following circumstances:

a. Mixed-use developments qualify for the shared-parking percentage reductions specified in Figure 14 provided the development includes at least 10% of its gross floor area in a second category on Figure 14 (residential, lodging, office, business, and civic/education uses).

b. Each on-street parking space provided by the developer within ¼ mile of the on-site parking area will be counted as 2 required parking spaces.

c. No on-site parking spaces are required for an office, business, or civic/education use that occupies less than 1,500 square feet (up to three such uses per acre).

d. Up to half of the required spaces may be located up to 500 feet off-site in a dedicated or joint-use parking lot provided that permission to use those spaces is specified in a binding agreement that is reviewed and approved during the site plan and appearance review process.

e. Restaurants may count each boat slip that is available to the public as one parking space.

f. The required number of on-site parking spaces may also be reduced through the waiver process (see section 45-51) or may

be increased by a special condition applied during the site plan and appearance review process (see sections 6-30–6-60).

g. A deferred parking plan may be approved by the Village if a parking study is provided that demonstrates the need for parking is less than what is required by code, or the owner has demonstrated that an alternative means of access to the uses on the site justifies the deferral of the construction of a portion of the required parking spaces. The deferred parking plan shall:

i) Be designed to contain sufficient space to meet the full parking requirements of the Code. The plan shall illustrate the layout for the full number of parking spaces, and shall designate which parking spaces are to be deferred.

ii) Be designed so that the deferred parking spaces are not located in areas required for landscaping, buffer zones, or areas that would otherwise be unsuitable for parking spaces because of the physical characteristics of the land or other requirements of this Code.

Figure 14 Shared Parking Reductions

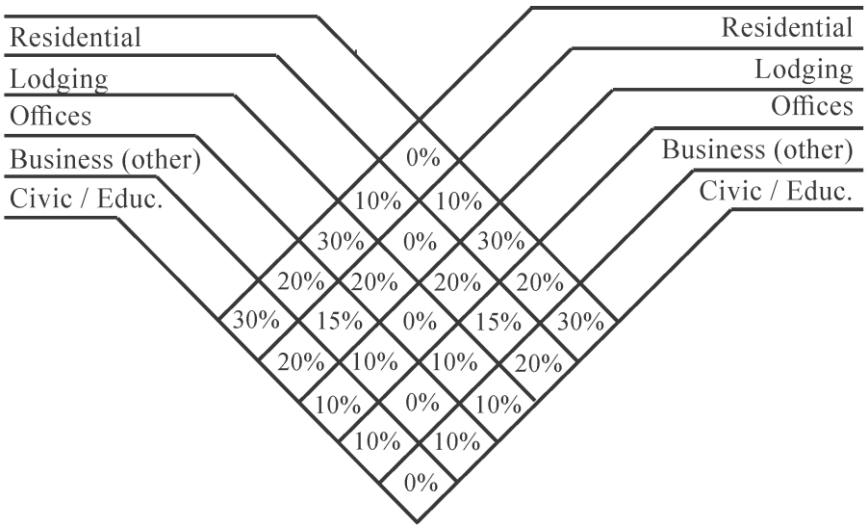

4. *Physical standards for parking lots, driveways, and loading.*

a. Physical standards for parking lots, driveways, and loading are provided in subsection 45-36.J.

~~H. *Off-street parking lot layout, construction and maintenance.* Whenever the required off-street parking requires the building of a parking lot, and wherever a parking lot is built, such parking lot shall be laid out, constructed and maintained in accordance with the following regulations:~~

~~1. Each parking space shall measure at least nine (9) feet by eighteen (18) feet (one hundred sixty-two (162) square feet) and shall be a definitely designated and marked stall adequate for one (1) motor vehicle.~~

~~2. All areas devoted to permanent off-street parking as required under this section shall be built in accordance with specifications for streets and parking of the Village of North Palm Beach and maintained in such manner that no dust will result from continuous use.~~

~~3. The parking lot shall be drained to eliminate surface water.~~

~~4. Where parking lot abuts a residential district which has common frontage in the same block with the parking lot, there shall be established a setback line of twenty-five (25) feet from the street lot line for the first twenty-five (25) feet from the residential zone.~~

~~5. Plans for the layout of a parking lot must be approved by the village engineer based on design standards approved by the Institute of Traffic Engineers.~~

~~6. The parking lot shall not have access from a more restrictive zoning district.~~

~~7. No parking shall be permitted in the first ten (10) feet of the required front yard depth, measured from the front property line or the first ten (10) feet of a side or rear yard when the side or rear yard abuts a residential zoning district, except as modified in paragraph 4 above. The restriction against parking in the first ten (10) feet of the required front yard depth measured from the front property line shall not apply to those properties which have complied in full with the landscaping provisions of Chapter 41-16 through 41-25 [chapter 27, article III] both inclusive.~~

~~8. Clearly defined driveways entering on U.S. [Highway No.] 1 shall be constructed using a raised curb of at least six (6) inches in height to delineate the driveways. All streets intersecting with U.S. [Highway No.] 1, currently designed driveways shall be constructed using both concrete button markers of at least four (4) inches in height placed twenty-four (24) inches apart to delineate the driveways. Such driveways shall have separate ingress and egress lanes not to exceed twenty (20) feet in width, exclusive of curb returns.~~

b. Parking lots shall be interconnected with adjoining properties where feasible. Connections help to minimize the number of driveways to US Highway 1 and to reduce unnecessary vehicular use of those driveways to reach adjoining properties.

i) Prior to approval of new or reconfigured parking lots, landowners are required to make an irrevocable offer of cross-access to the adjacent parcel and must design and build their parking lot to accommodate cross-access.

ii) When adjacent landowners seek approval of new or reconfigured parking lots, they will be required to reciprocate with a similar cross-access agreement and then must complete the physical connection.

iii Each landowner will control all rights to the use of their own parking spaces, but may choose to allow joint use of surplus parking spaces for a fee of their choosing or through private contracts with other parties.

c. Excess driveways to US Highway 1 shall not be approved, and existing driveways shall be consolidated or eliminated wherever possible. ~~The ingress and egress driveways shall be separated by [a] six-inch raised curb island of not less than three (3) feet in width and ten (10) feet in depth back from the right-of-way.~~

i) Driveways to US Highway No. 1 for two (2) adjacent, separately owned parcels should ~~may~~ be located on their joint property line wherever possible.

ii) On corner lots, driveways may be required to be located on the less-traveled street. In all cases, driveways may not be located closer than forty (40) feet to an intersection. ~~Except in cases where driveways are located on joint property lines, all driveways must be not less than twenty-five (25) feet from the adjacent property line. Only one (1) such combined driveway shall be permitted for each lot with a width of one hundred (100) feet or less.~~

~~9. The rear yard of all lots in the C-1A district shall be designed and improved to facilitate loading and unloading. There shall be adequate space for standing, loading and unloading services to avoid undue interference with public use of streets or alleys.~~

5. ***Standards for parking garages.*** Parking spaces may be provided under or in buildings or in dedicated parking garages instead of being provided in uncovered surface parking lots. Such parking spaces need not comply with the minimum setbacks for surface parking lots. These parking spaces must be screened from view from all streets. Screening may be provided by rooms in the same building or with a liner building that is at least two stories tall with rooms at least 20 feet deep.

~~I. *Time-share structures; floor area.* In time-share structures, each dwelling unit having one (1) bedroom shall have a minimum floor area of seven hundred fifty (750) square feet; an additional one hundred fifty (150) square feet of floor area shall be required for each additional bedroom provided.~~

~~J. *Architecture*. To provide the village with harmonious development, but without undue restrictions, the following features are required:~~

~~1. All building fronts and sides must be completely enclosed except for necessary doorways for ingress and egress.~~

~~2. No canopies are permitted unless constructed of metal, or other permanent materials and are installed parallel to the store front sidewalks not less than nine (9) feet above the sidewalk.~~

I. *Review procedures.*

1. *Submittal and review procedures*. Compliance with the standards of the C-MU district shall be evaluated during the site plan and appearance review process before building and other permits may be issued (see sections 6-30–6-60).

2. *Variances.* Variances may be granted by the village to standards in the C-MU district using the same procedures and criteria the village uses in granting variances from other regulations (see section 45-50).

3. *Waivers.* Waivers may be granted by the village to certain standards in the C-MU district in accordance with the applicable village procedures for granting waivers (see section 45-51), with these additional requirements:

a. The waiver process in the C-MU district cannot be used to:

i) Add uses that are not allowable under this code.

ii) Increase the allowable residential density.

iii) Increase the allowable building height, except for the extra story that may be requested pursuant to 45-31.E.4.

b. This additional finding must be made before the village approves a waiver in the C-MU district:

i) The proposed waiver meets the intent of the Village of North Palm Beach Citizens' Master Plan Report, adopted by the village council on October 27, 2016, through Resolution 2016-73.

EXHIBIT 2 (C-C TO C-T)

Sec. 45-32.1. – C-T ~~C-C~~ transitional commercial district.

A. ***General description***. This residential/commercial transitional district is to provide for the development of low-intensity residential and business ~~offices and other complementary~~ uses. The C-T ~~C-C~~ district shall serve as a transition between strictly residential areas and intense commercial development.

B. ***Uses permitted.*** The following uses are permitted in the C-T ~~C-C~~ transitional commercial district:

1. Financial institutions
2. Professional and business offices, not including medical and dental clinics
3. Florists
4. Clothing stores
5. Stationery stores
6. Photo studios/camera shops
7. Sporting goods stores
8. Gift shops
9. Candy shops
10. Seamstress/tailor shop
11. Personal service establishments, such as barber shops, ~~12.~~ hair salons, and ~~13.~~ nail salons
12. ~~14.~~ Instructional dance/music studios
13. Family day care home.
14. Multiple-family dwelling structures of 2, 3, or 4 dwelling units, provided that residential density does not exceed 12 units per acre.

C. ***Conditions for permitted uses:***

1. All activities, sales and storage of goods must be conducted entirely within completely enclosed buildings with permanent nonmoving outside walls.
2. No outside sidewalk of parking lot storage (or) display of merchandise will be permitted.
3. No manufacturing or production of products for retail or wholesale will be permitted.

D. ***Building height regulations.*** No building or structure shall exceed two (2) stories or twenty five (25) feet.

E. ***Building site area regulations:*** Maximum floor-area-ratio: 0.70 ~~1. Maximum lot coverage. Main and accessory buildings shall cover no more than thirty-five (35) percent of the total lot area. 2. Reserved.~~

F. ***Yards.***

1. ***Front yards.***

(a) All buildings shall be constructed from the Alternate A-I-A or Prosperity Farms Road right-of-way to provide a front yard of not less than twenty (20) ~~thirty (30)~~ feet.

(b) All buildings shall be set back from the right-of-way of streets which intersect with Alternate A-I-A or Prosperity Farms Road providing a yard of not less than ten (10) ~~twenty-five (25)~~ feet.

(c) The ground story of each building facade that faces a front yard must have at least 15% of its surface area in transparent glass that will transmit at least 50% of visible daylight.

2. ***Side and rear yards.*** All buildings shall be set back from side and rear lot lines so as to provide side and rear yards of not less than:

(a) Ten (10) ~~Fifteen (15)~~ feet when abutting a lot with residential zoning.

(b) Zero (0) feet when abutting a lot with commercial or mixed-use zoning.

~~3. ***Rear yards.*** All buildings shall be set back from rear lot lines so as to provide a rear yard of not less than fifteen (15) feet.~~

G. ***Off-street parking regulations.*** Off-street parking shall be provided at half of the number of parking spaces required in:

1. the C-S zoning district for commercial uses; and ~~the same as for the CA commercial district.~~

2. the R-2 zoning district for residential uses.

H. ***Off-street parking layout, construction and maintenance*** shall be as provided in section 45-36.J. ~~the same as for the CA commercial district.~~

I. ***Landscape standards.*** Landscaping shall be required in the following areas as required by the village's landscaping requirements:

1. Miscellaneous landscape elements, as required in section 45-88;
2. Off-street parking lots, as required in section 45-89;
3. Site perimeters, as required in section 45-90, except that no perimeter landscaping is required along a lot line that abuts commercial zoning; and
4. Base of foundation, as required by section 45-91.

EXHIBIT 3 (C-1 TO C-S)

Sec. 45-33. – C-S shopping C~~-1 neighborhood~~ commercial district.

General description. This shopping ~~neighborhood commercial~~ district is established to provide that the principal use of land is devoted to community and neighborhood shopping and to tourism-related ~~transient~~ uses and to encourage the development of these locations for such uses and in such manner as to minimize congestion and interference with other land uses.

A. ***Uses permitted***. Within any C-S ~~C-1 neighborhood commercial~~ district, no building, structure, land or water shall be used, except for one (1) or more of the following uses:

1. Reserved. ~~Any use permitted in the C-1A limited commercial district.~~
2. Any retail business or commercial use including neighborhood commercial use that meets the daily living needs of village residents and which does not involve the manufacturing or processing of products; provided, however, automobile repair shops are not a permitted use except as an accessory use to an automotive service station or retail automobile tire store.
3. Transient commercial uses serving either the motoring public or village residents including hotels and motels, conference and retreat facilities, filling stations, sale of convenience goods, and restaurants.
4. Personal service establishments, including, but not limited to, banks, barbershops, bowling alleys, beauty salons, medical and dental clinics, professional and other offices, funeral homes, shoe repair shops, laundry pickup stations and self-service laundries, furniture display stores and drugstores.
5. Mobile home park.
6. Adult entertainment establishments.
7. Religious worship or related religious activities.
8. Limited access self-storage facilities are defined as a fully enclosed structure for indoor storage with a minimal amount of access points from the exterior of the building. These exterior access points provide access to interior hallways that directly serve individual storage units rented to the public. No direct access from the exterior of the building to an individual storage unit is permitted.
9. Dog daycare, as defined and regulated in the I-1 zoning district.
10. Restaurants and cocktail lounges.
11. Nursery and private schools.
12. Marinas and their accessory uses such as wet boat storage facilities, indoor dry boat storage facilities, gasoline supplies and such minor repair facilities as are incidental to boat storage and which do not involve major boat and/or engine overhaul.
13. Multiple-family dwelling structures as a component of a commercial planned unit development containing a commercial component

including retail and non-retail commercial facing a primary street frontage with a depth to be determined by the village council.

* * *

E. ***Off-street parking regulations.***

1. Reserved. ~~Same as for the C-1A limited commercial district for churches, motels, hotels, time-share units and restaurants.~~
2. For general business, commercial or personal service establishments, one (1) space for each two hundred (200) square feet of nonstorage first floor area, plus one (1) space for each two hundred (200) square feet of nonstorage area above the first floor.
3. Medical or dental offices or clinics, one (1) space for each one hundred fifty (150) square feet of floor area, up to three thousand (3,000) square feet; one (1) additional space for each additional two hundred (200) square feet of floor area up to five thousand (5,000) square feet; one (1) additional space for each additional two hundred fifty (250) square feet of floor space in excess of five thousand (5,000) square feet.
4. Offices, one (1) space for each three hundred (300) square feet of floor area used for office purposes.
5. Schools and public buildings, one (1) space for each four (4) seats in the main auditorium or place of assembly.
6. Theaters, auditoriums, one (1) space for each four (4) seats.
7. No parking shall be permitted in the first ten (10) feet of the required front yard depth, measured from the front property line. The restriction against parking in the first ten (10) feet of the required front yard depth measured from the front property line shall not apply to those properties which have complied in full with the landscaping provisions of this code. ~~chapter 41-16 through 41-25 [chapter 27, article III], both inclusive.~~
8. Furniture display stores, one (1) space for each four hundred (400) square feet of sales area.
9. Retail business with floor area in excess of fifty thousand (50,000) square feet, one (1) space for each two hundred fifty (250) square feet of non-storage floor area.
10. Limited access self-storage facilities, one (1) space for each two hundred (200) storage units plus five (5) customer parking spaces.
11. Marinas:
    - i) one (1) space for every two (2) wet boat slips.
    - ii) one (1) space for every six (6) dry boat slips.
12. Motels and hotels, one (1) space for each guest bedroom, plus one (1) additional space for each five (5) employees.
13. Churches, the same as for the R-2 multiple-family dwelling district.

14. Restaurants, one (1) space for each seventy-five (75) square feet of floor area devoted to patron use, or one (1) space per three (3) fixed seats, whichever is the greater, and one (1) space for each one and one-half (1½) projected employees who would be actually working during peak employment hours.

* * *

G. ***Conditions for permitted uses:***

1. A car wash and car waxing business whether in conjunction with a filling station or as an independent enterprise shall be allowed to utilize an awning structure or structure which shall be located in the rear yard with a minimum five-foot setback and within the building side lines extended.
2. All activities, sales and storage of goods must be conducted entirely within completely enclosed buildings with permanent nonmoving outside walls. The following exceptions apply:
   i) Restaurants that qualify under outdoor seating provisions of Appendix C—Zoning.
   ii) Marinas with enclosed new boat retail display area may utilize outdoor rear and side yard site area for ground level new boat storage, rigging, minor repair and display subject to the following conditions:
      a. Outdoor storage, rigging, minor repair and display areas shall be completely screened from the view of the street right-of-way and adjacent properties with an opaque wall or fence to a height of six (6) feet.
      b. The area of outdoor storage, rigging and display area shall not exceed the enclosed retail display floor area, including retail display area office space, or fifteen (15) percent of the total site area, whichever is less.
   iii) Outdoor runs/dog exercise areas which are accessory to veterinary clinics. All such outdoor runs/dog exercise areas shall comply with the requirements of Section 45-38.D.12.d of this code.
3. No outside sidewalk or parking lot storage or display of merchandise will be permitted.
4. Limited access self-storage facilities shall only be allowed on properties within commercial planned unit developments and accompanied by the following conditions:
   i) All exterior service doors must be not visible from any public street or adjacent property.
   ii) All buildings must be a maximum of two (2) stories with architectural treatment to reflect the actual number of stories.

iii) No blank walls shall be permitted.

iv) A mix of uses must be provided that includes a minimum of ten (10) percent Gross Floor Area (GFA) retail or professional office (excluding the on-site management office for the self-storage facility).

v) A minimum of one thousand (1,000) feet separation from property line to the closest adjacent property line shall be required between limited access self-storage facilities.

5. All new marinas and major improvements to existing marinas shall provide sewage pump-out service to boats seven (7) meters (twenty-two and ninety-seven hundredths (22.97) feet) in length or more. Major improvements include adding wet or dry boat slips; constructing new buildings; adding or expanding fueling facilities, and other improvements of a comparable scale as determined by the community development director.

EXHIBIT 4

Sec. 45-34. – C-G general commercial district.

A. ***Uses permitted.*** Within any C-G ~~C-2 commercial~~ district, no building structure, land or water shall be used, except for one or more of the following uses:

1. Any use permitted in the C-S ~~C-1A limited commercial~~ district.
2. Any retail business or commercial use which does not involve the manufacturing or processing of products.
3. Personal service establishments, including, but not limited to, banks, barbershops, bowling alleys, beauty salons, medical and dental clinics, professional and other offices, funeral homes, filling stations, shoe repair shops, laundry pickup stations and self service laundries, furniture display stores and drugstores.
4. Full service automotive dealerships and accessory uses including paint and body shops, repair shops and garages, limousine service and towing service.
5. Retail and wholesale sales of new vehicular parts, equipment and accessories without on-site installation.
6. Automobile service shops such as full service vehicle repair shops, muffler shops, tire shops, lubrication and oil change, window tinting, wash and detailing.
7. Automobile, truck and trailer rental business.
8. Adult entertainment establishment.
9. Limited Access Self Storage Facilities, which are defined as a fully enclosed structure for the purpose of indoor storage, with a minimal amount of access points from the exterior of the building. These exterior access points provide access to interior hallways that directly serve individual storage units rented to the public. No direct access from the exterior of the building to an individual storage unit is permitted.

B. ***Development standards.*** Every commercial use located within the C-G ~~C-2 commercial~~ district shall be so developed as to comply with the following performance standards:

1. ***Outside display***: Outside display areas for sale, lease or rental of vehicles shall be designed as follows:
   (a) Vehicles may be stored on an approved parking surface without reference to parking stalls, stall striping or wheel stops. This type of parking shall be allowed only pursuant to a site plan and appearance review and approval subject to Article III of Chapter 6 of the Village Code of Ordinances.

(b) Interior landscaping requirements within outside display areas pursuant to Article VIII ~~III~~ of this chapter ~~27 of the Village Code of Ordinances~~ shall be met by transferring the required landscaping to the perimeter of the site abutting public rights-of-way~~s~~. The transferred landscaped areas shall be designed and located so as to mitigate and buffer the impact of the aggregated vehicle storage area.

2. ***Locational and physical restrictions:***

(a) Repair facilities and paint and body shops shall be located at least one hundred (100) feet from any residentially-zoned lot. Service bay doors shall not be oriented toward any adjacent residentially-zoned property nor oriented toward any adjacent public street.

(b) Accessory fuel pump islands and automated wash facilities for vehicles shall not be located within one hundred (100) feet of any residentially-zoned property. Wash facilities shall be located within a completely enclosed building. Fuel pump islands shall be located within an enclosed area so that they are not visible off premises.

(c) The sale, lease or rental of automobiles, trucks, motorcycles, and recreational vehicles is allowed only on lots which meet the following minimum dimensions and area:

(1) Minimum frontage of 125'.

(2) Minimum width of 125'.

(3) Minimum depth of 200'.

(4) Minimum area of 1.5 acres.

3. ***Limited access self-storage facilities*** shall be accompanied by the following conditions:

(a) All exterior service doors must not be visible from any public street or adjacent property.

(b) The architectural treatment of all buildings must reflect the actual number of stories.

(c) No blank walls shall be permitted

(d) A mix of uses must be provided that includes a minimum of ten percent (10%) Gross Floor Area (GFA) retail or professional office (excluding the on-site management office for the self-storage facility).

(e) A minimum of one thousand (1,000) feet separation from property line to the closest adjacent property line shall be required between limited access self-storage facilities.

EXHIBIT 4

C. ***Use and operating restrictions***. Every commercial use located within the C-G ~~C-2 commercial~~ district shall be so operated as to comply with the following performance standards:

1. No industrial equipment or vehicles shall be sold, leased, rented or otherwise stored within the C-G ~~C-2~~ district. For purposes herein, industrial equipment is defined as equipment used primarily for purposes other than transportation or hauling. Trucks other than pickup trucks, vans and jeeps shall be displayed in areas separated from a public right-of-way by a building.

2. No vehicle shall be parked for display purposes with its hood or trunk open, nor elevated off the ground in any way. Vehicles shall not be parked in any right-of-way or driveway.

3. Advertising, flags, pennants, streamers, balloons, signs or vehicle stock numbers shall not be displayed on any vehicle or equipment. Similar objects or advertising designed to attract the public's attention shall not be displayed outdoors on any lot, building, vehicle or equipment.

4. Any areas designated for the off-loading of vehicles or for loading and deliveries shall be located to the rear of buildings and shall be located so as to contain noise on-site. These areas shall not be located closer than one hundred (100) feet from any residentially-zoned lot and shall be appropriately designated, marked and signed.

5. Dealers are prohibited from using streets in a residential zone for the testing of vehicles after servicing and for the demonstration of vehicles.

6. Exterior lighting fixtures shall not exceed twenty-five (25) feet in height; shall be directed away from adjacent properties; shall confine light to the site only; and shall not exceed when measured at any property line, the following illumination:
   (a) One hundred (100) foot-candles within display areas.
   (b) Forty (40) foot-candles within all areas.
   (c) After 11:00 p.m., the illumination in display areas shall be reduced to fifty (50) foot-candles.

7. No outdoor speakers or public address systems that are audible from the exterior of the site shall be permitted.

8. Customer parking shall be marked with an above grade sign and shall be physically separated from the vehicle sales, storage and display area. This barrier may be in the form of a landscape strip, curbing or removable bollards.

EXHIBIT 4

9. The height of buildings, the site area of buildings, yard spaces, and floor area regulations in the C-G ~~C-2 zoning~~ district shall be the same as required in the C-S ~~C-1 neighborhood commercial~~ district, with the following exception: Limited access self-storage facilities shall be limited to a maximum of three (3) stories in height.

10. With the following exceptions, off-street parking regulations shall be the same as for the C-S ~~C-1 neighborhood commercial~~ district:
    (a) Full-service automotive dealerships, Customer and employee parking requirements; One (1) space for each five hundred (500) square feet enclosed floor area, plus one (1) space per each four thousand five hundred (4,500) square feet of outdoor sales display and rental area, plus one (1) space per service bay, plus one (1) space per employee of the shift of largest employment. Parking for vehicle storage, sales or display may not be counted toward meeting the number of required off-street parking spaces or to be provided for customers and employees.
    (b) Limited access self-storage facilities, one (1) space for each two hundred (200) storage units plus five (5) customer parking spaces.

EXHIBIT 5 (PUD)

Sec. 45-35.1. - Planned unit development.

I. ***Statement of intent.***

A. The intent of this section is to provide, in the case of a commercial planned unit development consisting of one (1.0) or more acres, in the case of an industrial planned unit development consisting of one (1.0) or more acres, and in the case of a residential planned unit development ~~of five (5) or more acres~~, an added degree of flexibility in the placement and interrelationship of the buildings and uses within the planned unit development, together with the implementation of new design concepts. At the same time the intensity of land use, density of population and amounts of light, air, access and required open space will be maintained for the zoning district in which the proposed project is to be located, except as may be permitted for key redevelopment sites through subsection 45-35.1.VIII. ~~The village council hereby determines that the regulations pertaining to intensity of land use, density of population and required open space are the minimum requirements for the protection and promotion of the public health, safety and general welfare.~~ Nothing herein should be construed as allowing deviation for uses other than those specified as permitted uses, nor any greater intensity of use or density of population nor any less required open space than that which is specified in this chapter for the zoning district in which a proposed project is located, except as may be permitted through subsection 45-35.1.VIII.

B. Subject to the foregoing statement of intent, the village council may, in the case of commercial, industrial and residential planned unit developments, allow for minor modification of the provisions of this chapter or other land development regulations in accordance with the procedure set forth in subsections II, III, IV and V.

C. The Planned Unit Development procedures in section 45-35.1 may not be used in the following zoning districts which provide a different process for considering minor modifications:

1. **C-MU** – the C-MU zoning district allows waivers (see the C-MU zoning district and section 45-51).

2. **C-3** – the C-3 zoning district contains special PUD procedures that apply only to that district (see subsection 45-34.1.K).

3. **C-NB** – the C-NB zoning district allows waivers (see the C-NB zoning district and section 45-51).

EXHIBIT 5 (PUD)

II. ***Filing of application.***

A. Any person may file an application with the village council for minor modifications of the provisions of this chapter. This application shall contain at least the following:

1. All application and review procedures shall comply with ~~section 21-12, Changes to zoning ordinances and~~ section 45-49, Application for rezoning, of this Code.

2. A statement listing and fully explaining the specific modifications of the provisions of this chapter 45 which are desired, as well as the purposes for which the modifications are intended.

3. All application procedures for residential planned unit developments shall be as required by the subdivision provisions of this Code.

4. Compliance with the village comprehensive plan is required.

5. Land covered by the development plan shall be platted concurrently with final approval of the development plan.

6. The fee for filing an application for a planned unit development shall be established in the master fee scheduled adopted annually as part of the village budget.

7. The final approved development plan shall include the plat drawings and necessary submittals demonstrating acceptability of all factors and standards evaluated in subsection IV(A).

8. All dwelling unit sizes, parking criteria and building site coverage must meet the requirements of the zoning code for each type of proposed use, except at follows.

Exception A: applicants for assisted living facilities may, when accompanied by a justification statement, apply for relief from the off-street parking and minimum dwelling unit size requirements.

Exception B: applications submitted through subsection 45-35.1.VIII for key redevelopment sites may, when accompanied by a justification statement, apply for relief from off-street parking and minimum dwelling unit size requirements. Building site coverage requirements do not apply.

Exception C: applications for commercial or mixed-use development may, when accompanied by a justification statement, apply for relief from the off-street parking requirements.

9. All land included for the purpose of development within a planned unit development shall be owned or under the unified control of the applicant for such zoning designation, whether the applicant is an individual, partnership, corporation, trust or group of individuals, partnerships, trusts or corporations. The applicant shall present satisfactory evidence of the unified control of the entire area by applicant within the proposed planned unit development and shall state agreement that, if he proceeds with the proposed development, he will:

a. Do so in accordance with the officially approved development plan and such other conditions or modifications as may be attached to the conditional use.

b. Provide agreements, covenants, contracts, deed restrictions or sureties acceptable to the village council, both for completion of the undertaking in accordance with the adopted development plan, and also for the continuing operation and maintenance of areas, functions and facilities which the plan shows are not to be operated or maintained at general public expense. Such documents must be in a form acceptable to the Village Attorney.

c. Bind his development successors in title to any commitments made under subsections a. and b., preceding.

10. Any tract of land for which a planned unit development is made shall contain sufficient width, depth and frontage on a public dedicated arterial or major street or appropriate access which will accommodate the proposed use and design.

11. In the event any building or structure built under this section is destroyed or removed by or for any cause, said building or structure, if replaced, shall be replaced with a building or structure of similar size and type not exceeding the dimensions of the original building or structure. The developer shall include the appropriate deed restrictions and/or covenants so as to require replacement as outlined above.

III. ***Referral to planning commission***. The village council shall refer each application for a planned unit development to the planning commission for study and recommendation.

IV. ***Action of planning ~~committee [~~commission.~~]~~***

A. After a study of an application for a planned unit development and the required public hearing, the planning commission shall make a recommendation to the village council to approve, approve as modified, or reject the application based upon the following standards:

1. The proposed use or uses shall be of such location, size and character as to be in harmony with the appropriate and orderly

development of the zoning district in which situated and shall not be detrimental to the orderly development of adjacent zoning districts.

2. The location and size of the proposed use or uses, the nature and intensity of the principal use and all accessory uses, the site layout and its relation to streets giving access to it, shall be such that traffic to and from the use or uses, and the assembly of persons in connection therewith, will not be hazardous or inconvenient to the neighborhood nor conflict with the normal traffic of the neighborhood. In applying this standard, the commission shall consider, among other things: convenient routes for pedestrian traffic, particularly of children; the relationship of the proposed project to main traffic thoroughfares and to street and road intersections; and, the general character and intensity of the existing and potential development of the neighborhood. In addition, where appropriate, the commission shall determine that noise, vibration, odor, light, glare, heat, electromagnetic or radioactive radiation, or other external effects, from any source whatsoever which is connected with the proposed use, will not have a detrimental effect upon neighboring property or the neighboring area in general.

3. The location and height of buildings, the location, nature and height of walls and fences, and the nature and extent of landscaping of the site shall be such that they will not hinder or discourage the proper development and use of adjacent land and buildings nor impair the value thereof.

4. The standards of density and required open space in the proposed project are at least equal to those required by this ordinance in the zoning district in which the proposed project is to be located, except as may be permitted for key redevelopment sites through subsection 45-35.1.VIII.

5. There shall be no uses within the proposed project which are not permitted uses in the zoning district in which the proposed project is to be located.

Exception: ~~A~~ Mixed uses ~~occupancy~~ may be allowed if the existing zoning district usage is commercial. The mixed uses ~~usage occupancy~~ shall only be residential and mercantile or residential and business.

B. The commission may recommend such changes or modifications in the proposed plan as are needed to achieve conformity to the standards as herein specified. The reasons for the changes or modifications shall be included in the recommendation.

C. The commission shall not recommend the project unless it finds that all of the standards as herein specified have been met. If there are minor modifications to the provisions of this chapter, the commission may recommend its approval at the same time. It shall also, where it deems appropriate and necessary, recommend to the village council those conditions to be imposed upon the project, its operation, or both, that are needed to assure adherence to the aforesaid standards.

V. ***Action of village council***. The village council, upon the receipt from the planning commission of the report on the planned unit development and the minor modifications to the provisions of this chapter may, after the required public hearing, approve or reject such project and modifications, incorporating with an approval such conditions as the council deems appropriate. The approval shall be by ordinance.

VI. ***Effect of approval of village council***. The approval of the application by the village council shall allow the building official to issue a building permit in conformity with the application as approved. This permit shall specify with particularity the exact modifications to the provisions of this chapter which have been approved by the village council. The holder of this permit may then proceed with his project in conformity with said permit. No deviations from the conditions of the permit shall be allowed except those which shall be in conformity with the basic provisions of this ordinance as they apply to the zoning district in which the project is located. The community development director may adjust a modification to the provisions of this chapter only if the adjustment had been authorized by conditions that the Village Council placed on the planned unit development approval.

VII. ***Public notice.*** Public notice of all hearings conducted in accordance with this section shall be provided as required by section 21-3 of the village Code.

VIII. ***Key redevelopment sites.*** The village has identified key sites in need of redevelopment and encourages the use of this Planned Unit Development process to redevelop those sites in accordance with design concepts developed or endorsed by the village. Minor modifications to the provisions of this chapter or other land development regulations may be requested through the Planned Unit Development process for these sites. The following additional standards apply during this process:

1. ***Regulating plans.*** Eligible sites are depicted on regulating plans in Figures 45-35.1-A-1, 45-35.1-B-1, and 45-35-1-C-1.

2. ***Illustrative plans***. Renderings or illustrative plans may be provided in this subsection to show hypothetical buildings on eligible sites using these standards. See Figures 45-35.1-A-2, 45-35.1-B-2, and 45-35.1-C-2.

3. ***Build-to zone.*** Where build-to zones are shown on the regulating plan, the build-to zone is 0 feet minimum and 20 feet maximum using the methodology in the C-MU zoning district (unless different distances are specified on the regulating plan). Build-to zones supersede setback requirements in the underlying zoning district.

4. ***Floor-to-area ratio.*** The Comprehensive Plan establishes caps on the ratio of floor area to lot area for most land in the village; however, those caps do not apply to these key redevelopment sites.

5. ***Building frontage standards.*** Where build-to zones are shown on the regulating plan, building frontages must be at least 60% of the lot width, measured using the methodology in the C-MU zoning district (unless a different percentage is specified on the regulating plan).

6. ***Building height.*** Buildings may be up to 4 stories tall. For the purpose of calculating the number of stories in a building, see the methodology in the C-MU zoning district. This height limitation supersedes height limitations in the underlying zoning district.

7. ***Façade transparency.*** Where build-to zones or civic spaces are shown on the regulating plan, facades must be at least 30% transparent at the ground story and 20% transparent at each upper story, measured using the methodology in the C-MU zoning district (unless different percentages are specified on the regulating plan).

8. ***Encroachments.*** Architectural elements may project beyond the closest point to a property line where an exterior wall may be constructed to the same extent as allowed in the C-MU zoning district, irrespective of setback requirements in the underlying zoning district.

9. ***Parking setbacks.*** New or reconfigured surface parking lots must be set back at least 50 feet from US Highway 1 and at least 30 feet from all other existing and new streets.

10. ***Parking garages.*** Parking spaces may be provided under or in buildings or in dedicated parking garages instead of being provided in uncovered surface parking lots. Such parking spaces need not comply with the minimum setbacks for surface parking lots, but must be screened from view from all streets. Screening may be provided by rooms in the same building or with a liner building that is at least two stories tall with rooms at least 20 feet deep.

11. ***New streets.*** Where a new street is shown on the regulating plan, the new street must be constructed using the standards in the C-MU zoning district (unless different standards are specified on the regulating plan).

12. ***Sidewalk easements.*** Where a sidewalk easement is shown on the regulating plan, the easement must be dedicated and the sidewalk must be constructed using the standards in the C-MU zoning district.

EXHIBIT 5 (PUD)

Figure 45-35.1-A-1 Camelot Regulating Plan

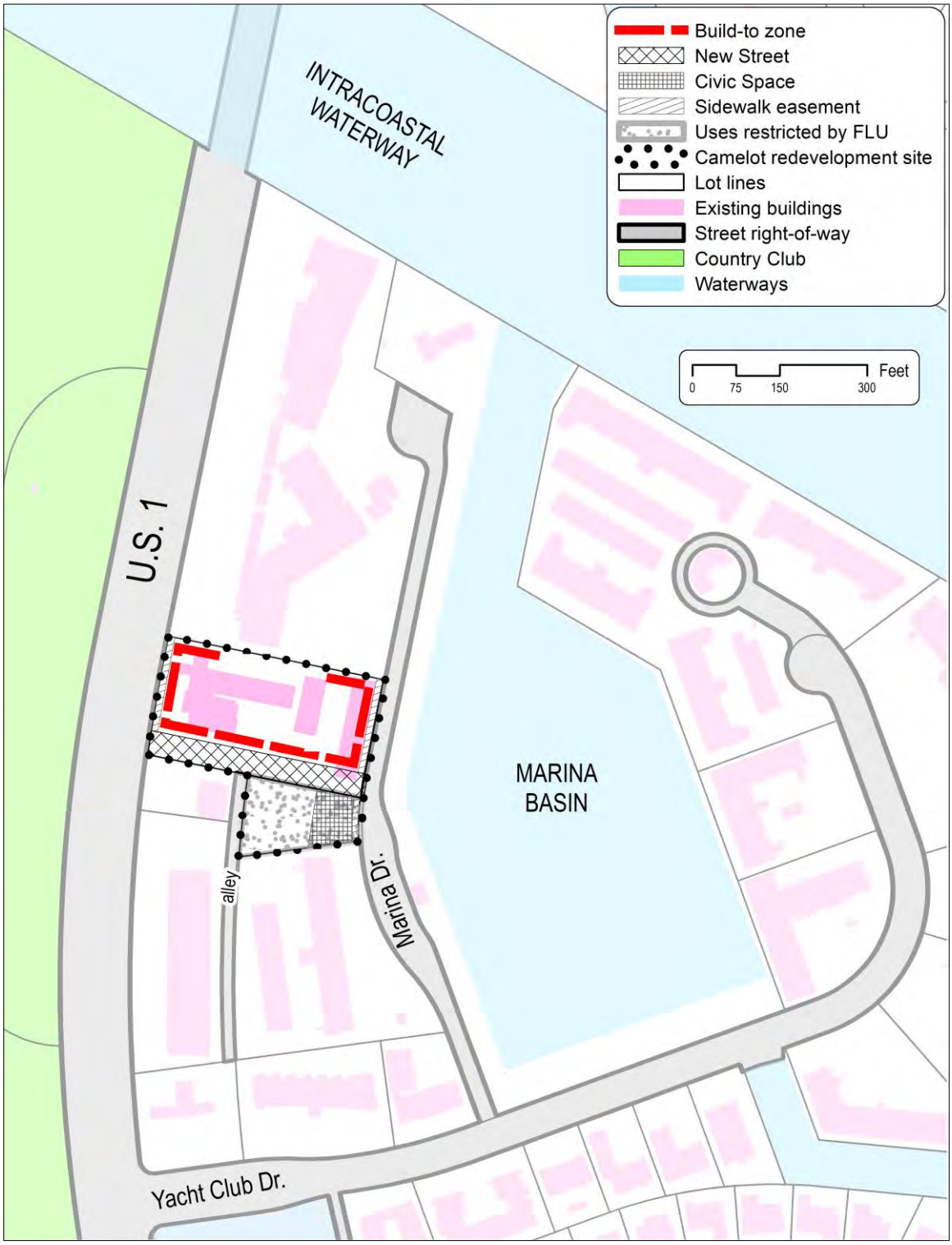

1

EXHIBIT 5 (PUD)

Figure 45-35.1-A-2 Camelot Illustrative Plan

1

EXHIBIT 5 (PUD)

1

Figure 45-35.1-B-1 Crystal Cove Regulating Plan

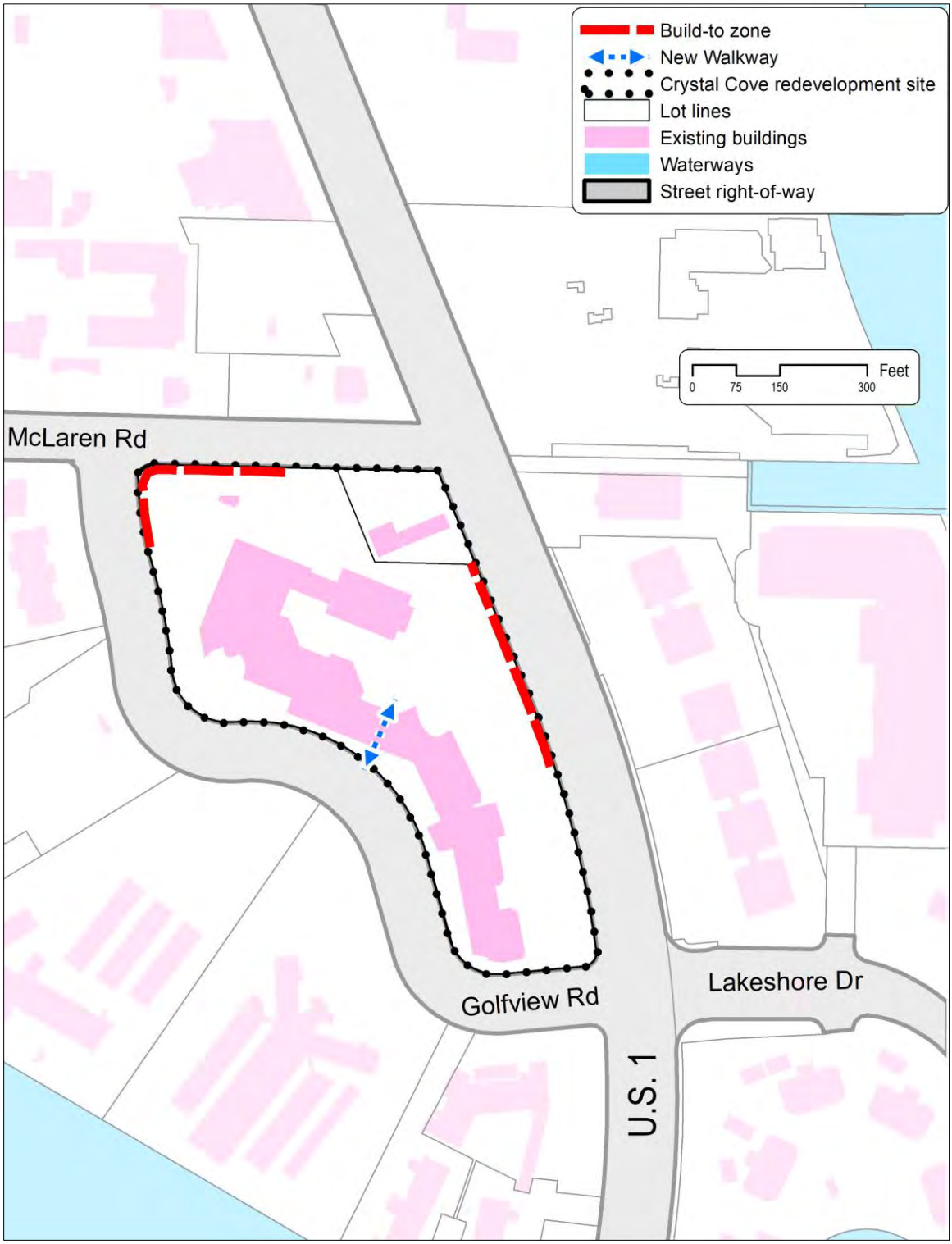

EXHIBIT 5 (PUD)

Figure 45-35.1-B-2 Crystal Cove Illustrative Plan

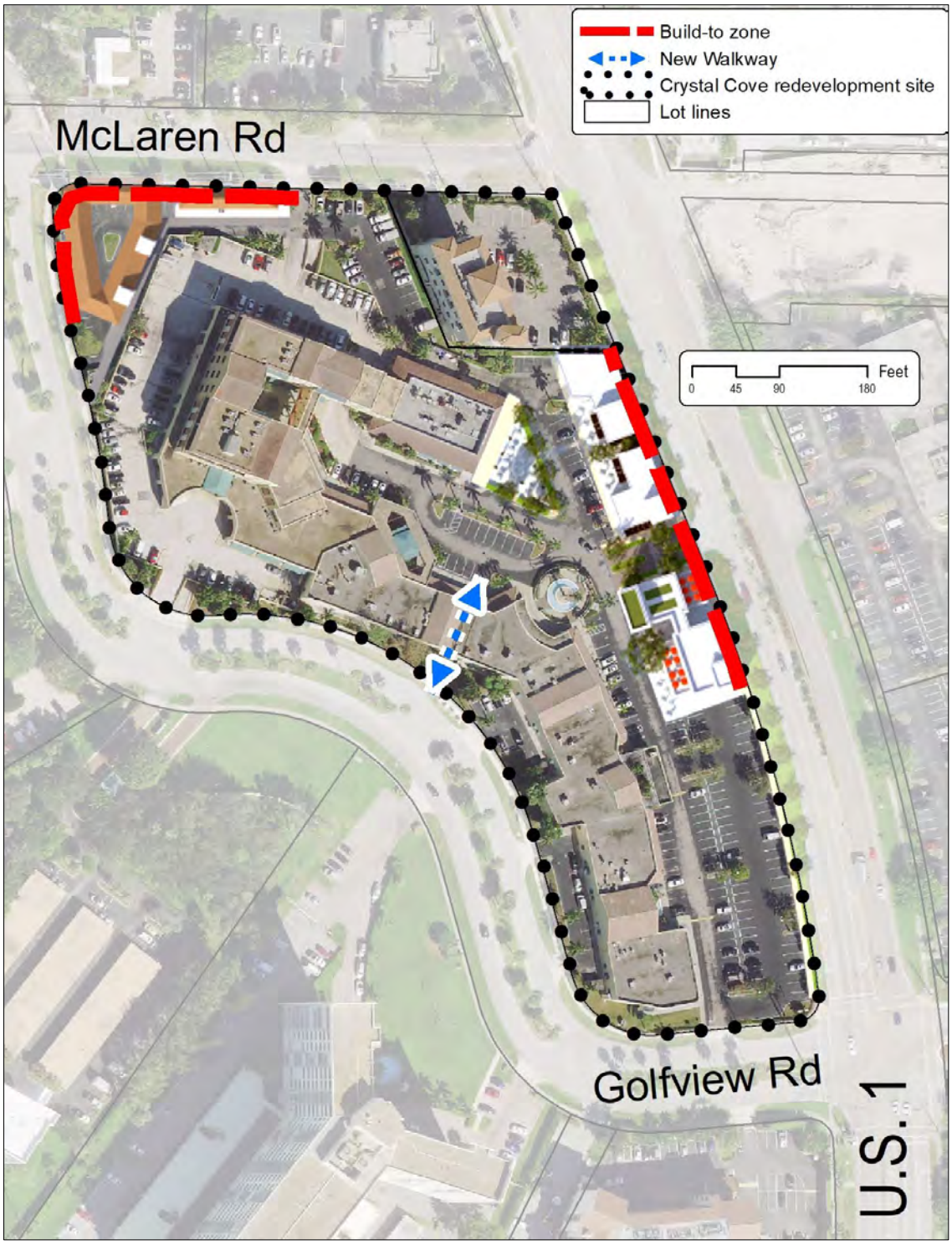

1

EXHIBIT 5 (PUD)

1

Figure 45-35.1-C-1 Shore Court at US 1 Regulating Plan

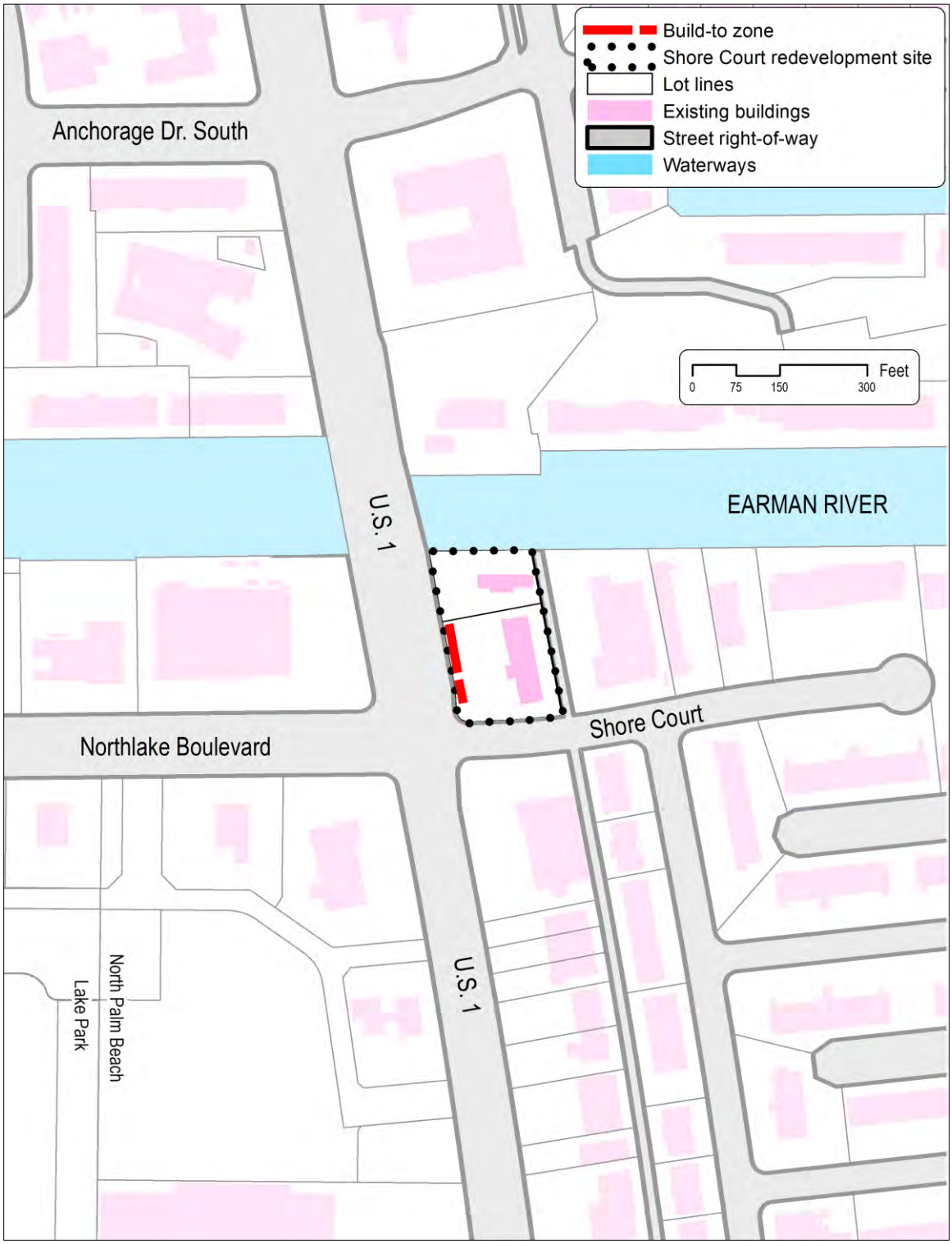

Exhibit 5 (PUD)

Figure 45-35.1-C-2 Shore Court at US 1 Illustrative Plan

1

EXHIBIT 6 (NBOZ TO C-NB)

Sec. 45-35.3. – C-NB Northlake Boulevard commercial district. ~~overlay zoning district (NBOZ)~~.

ARTICLE 1 ESTABLISHED.

The Northlake Boulevard commercial ~~overlay zoning~~ district ~~(NBOZ)~~ shall consist of ~~that portion of~~ real properties within the village on the north side of ~~that front upon or are adjacent to~~ Northlake Boulevard between Alternate A1A and US Highway 1 as indicated on the official zoning map.

ARTICLE 2 CONSISTENCY WITH COMPREHENSIVE LAND USE PLAN

The establishment of the C-NB~~OZ~~ district is hereby declared consistent with the village comprehensive plan.

ARTICLE 3 GENERAL PROVISIONS

Sec. 3-1 Applicability.

A. ***Applicability***. The provisions of the C-NB~~OZ~~ district shall apply to all existing and future development within the boundaries of the C-NB~~OZ~~ district as follows:

1. All new development.
2. All renovations, additions, or redevelopment to existing structures where the cost of such is greater than fifty (50) percent of the assessed improvement value of the parcel, indicated on the most recent tax roll of Palm Beach County Property Appraiser, or an increase of greater than twenty (20) percent of the square footage of the existing structure shall conform to one hundred (100) percent of the C-NB~~OZ~~ Regulations.
3. When the use of an existing structure ceases for one hundred eighty (180) consecutive days, or as otherwise determined to be a discontinued or abandoned use by the local zoning code.

B. ***Invalid approvals***. Invalid development orders or permits of projects, which have been revoked or have expired shall be subject to all applicable provisions of the C-NB~~OZ~~ district.

~~C. *Conflict with other applicable regulations.*~~

~~1. When the provisions of the NBOZ district conflict with other village regulations applicable to the site, the most restrictive provisions shall prevail.~~

~~2. Provisions addressed within the village regulations that are not addressed within the NBOZ district remain applicable in the development or redevelopment of a site in the NBOZ.~~

Sec. 3-2 Procedures, variances, and waivers. ~~and regulations.~~

A. ***Submittal and review procedures***. Development or redevelopment within the corridor shall adhere to the regulations imposed by the C-NB~~OZ~~ district. Compliance with the standards of the C-NB~~OZ~~ district shall be demonstrated by submittal of architectural drawings and a site development plan or site improvement plan in accordance with village regulations, which generally require site plan and appearance approval before building and other permits may be issued. ~~The development order~~ That approval shall reflect the restrictions imposed by the C-NB~~OZ~~ district.

~~B. *Use regulations*. Restrictions which may be imposed in the NBOZ district shall be limited to the following:~~

~~1. Reducing the number of land uses permitted by right and permitted by conditional use within the NBOZ district;~~

~~2. Eliminating inappropriate land use within the NBOZ district;~~

~~3. Limiting maximum building or impervious coverage permitted;~~

~~4. Management of access to abutting and nearby roadways, including specific design features intended to reduce adverse traffic impacts; or~~

~~5. Any other specific site development regulations required or authorized by these provisions.~~

~~C. *Review procedures*. Unless otherwise stated within these provisions, the review procedures for development and redevelopment of applicable sites within the NBOZ district shall be pursuant to the village's review procedures and approval process.~~

~~D. *Waivers and variances*. Waivers and variances from the NBOZ regulations may be granted by the village: reviewing projects which are subject to the NBOZ regulations.~~

B. ~~2.~~ ***Variances.*** Variances may be granted by the village to standards in the C-NB district using the same procedures and criteria~~, which~~ the village uses in granting variances from other regulations (see section 45-50). ~~its code.~~

C. ~~1.~~ ***Waivers.*** Waivers ~~from the NBOZ regulations~~ may be granted by the village to certain standards in the C-NB district in accordance with the applicable village procedures for granting waivers (see section 45-51), with these additional requirements: ~~from its own code of ordinances~~.

1. The waiver process in the C-NB district cannot be used to:
   a. Increase the allowable residential density or building height.
   b. Add uses that are not allowable under this code.
2. These additional findings must be made before the village approves a waiver in the C-NB district:
   a. The proposed waiver meets the intent of the Northlake Boulevard regulations adopted concurrently by the village, county, Town of Lake Park, and City of Palm Beach Gardens.

ARTICLE 4 ZONING REGULATIONS

Sec. 4-1 Development review regulations.

A. ***Allowable Uses.*** Table 4-1 indicates allowable uses in the C-NB district.

1. The uses listed in Table 4-1 are grouped into four use groups: Residential Uses, Lodging Uses, Business Uses, and Civic & Education Uses.

2. In one of the columns following each listed use, a symbol is provided to indicate that:

a. This use is permitted by right; or

b. This use may be approved as a special exception; see section 45-16.2 for standards and procedures; or

c. This use, like other uses not listed in Table 4-1, is not permitted in the C-NB district.

3. Terms in Table 4-1 are defined in section 45-2 under "Use Groups."

4. Also refer to section 45-16.1 on uses that are similar to uses listed in Table 4-1.

~~A. ***Conditional use and special permit use***. Conditional uses and special permit uses are generally compatible with the other uses permitted in the district, but which require individual review as to their location, design, configuration, intensity and/or density of use, buildings and structures, and may require the imposition of conditions in order to ensure the appropriateness of the use at a particular location. The supplemental regulations outlined in section 4-3 of this article are to be considered in addition to the existing village standards; however, the most restrictive regulations apply. Special permit uses are generally temporary for a specified fixed period of time.~~

~~1. ***Standards for conditional uses and special permit uses***. These uses shall be permitted only if the applicant for conditional use or special permit use approval demonstrates the following:~~

~~a. The proposed use is in compliance with all requirements of and is consistent with the general purpose, goals, objectives and standards of the village's land development regulations and comprehensive development plan;~~

~~b. The proposed use will not have an undue adverse effect on nearby properties;~~

~~c. The proposed use is compatible with the existing or planned character of the neighborhood in which it would be located; and~~

~~d. All reasonable steps have been taken to minimize any adverse effect of the proposed use on the immediate vicinity through site design, landscaping and screening.~~

Exhibit 6 (NBOZ to C-NB)

1

Table 4-1 Allowable Uses

	Permitted Use	Special Exception	Not Permitted
Residential Uses			
Mobile home park			●
Dwelling, one family detached			●
Dwelling, all other dwelling types	●		
Live/work unit	●		
Assisted living facility		●	
Community residential home			●
Lodging Uses			
Bed-and-breakfast establishment	●		
Hotel	●		
Motel	●		
Time-share unit	●		
Business Uses			
Offices, general	●		
Office or clinic, medical or dental	●		
Stores & services, general	●		
Stores & services, large format		●	
Adult entertainment			●
Convenience store with fuel		●	
Dog daycare		●	
Drive-through facility (for any use)		●	
Garage, parking		●	
Heavy commercial and light industrial:			
Contractor and trade operation		●	
Vehicle sales or repair		●	
All other			●
Medical marijuana treatment center			●
Restaurant or cocktail lounge	●		
Telecommunications antennas		●	
Civic & Education Uses			
Child care facility	●		
Church or place of assembly	●		
Civic space	●		
Family day care	●		
Government building	●		
Hospital or medical center		●	
Public space	●		
School, public or private		●	

2

~~2. ***Conditions on conditional uses and special permit uses***. The village council shall attach such conditions, limitations and requirements as are necessary to carry out the purpose of the village's land development regulations and comprehensive development plan and to prevent or minimize adverse impacts on adjacent properties, including, but not limited to, conditions relating to the size and intensity of the use, landscaping, lighting, adequate ingress and egress, traffic circulation and hours of operation. Such conditions shall be set forth expressly in the resolution granting the conditional use or special permit use.~~

~~3. ***Review by village council***. The village council shall conduct a public hearing on a conditional use or special permit use application and determine whether the request meets the criteria established in this section. At the close of the public hearing, the village council shall either adopt a resolution granting the application, with or without conditions, or deny the application.~~

~~B. *Prohibited uses*. Uses not listed in the use chart are prohibited unless it is determined by the village that the requested use is similar in nature to a listed use and not contrary to the intent of the NBOZ.~~

B. ***Building height.*** Building height is regulated through the architectural standards in Article 5; in no case may a building in the C-NB zoning district exceed 4 stories in height. For the purpose of calculating the number of stories in a building, stories shall be defined as the space between finished floor and finished ceiling, adjusted as follows:

1. Each level devoted to parking is considered as individual story when calculating the number of stories in a building.
2. A mezzanine will not count towards the number of stories provided that the total area of mezzanine level is less than 40 percent of the floor area of the main story below.

C. ***Existing planned development districts***. Properties within the jurisdiction of the village, which have a PUD designation at the time of adoption of the original NBOZ overlay in 2003, shall be permitted to have uses and design guidelines in accordance with the development order for that planned development district so long as the development order is in effect. Any amendment to the PUD will have to comply with the design guidelines of the current C-NB~~OZ~~ district.

~~D. *Variances*. A variance from the supplementary use standards established in this article shall not be granted by the village.~~

D. ~~E.~~ ***Accessory use***. An accessory use is customarily associated with the principal use, incidental to the principal use, and subordinate in area, extent or purpose, and serves only the principal use. Accessory uses shall be subject to the following:

1. All accessory uses shall be located on the same lot as the principal use.

2. A use that is an accessory to a nonresidential principal use shall not exceed thirty (30) percent of the floor area or business receipts of the principal use.

~~F.~~ **E.** *Parking and loading*. Properties will retain the existing parking ratios as of the date of adoption of the C-NB Code, which are listed in C-S code section 45-33.E. A new mixed-use development or mixed-use redevelopment may be granted the mixed-use parking standards listed in Table 16.A within 45-31.H.

a. Physical standards for parking lots, driveways, and loading are provided in subsection 45-36.J.

b. Mixed-use developments qualify for the shared-parking percentage reductions specified in Figure 14 in 45-31 (H) provided the development includes at least 10% of its gross floor area in a second category on Figure 14 (residential, lodging, office, business, and civic/education uses).

~~All parking and loading standards are governed by the village.~~

~~E.~~ F. ~~G.~~ ***Measuring distances***. All required distances between structures and/or uses within this article shall be measured and determined irrespective of existing municipal boundaries.

~~Sec. 4-2 Land use chart.~~

[the land use chart, endnotes, and district boundaries are being deleted]

~~F.~~ G. Notwithstanding anything contained elsewhere within this code ~~ordinance~~, the properties covered by the C-NB~~OZ~~ district which have approved uses under the immediately prior ~~existing underlying~~ zoning district of the village that are considered or deemed not approved uses in the land use chart above, shall retain their permitted status rather than being deemed ~~not be~~ non-conforming (see sections 45-60–45-68).

~~Sec. 4-3 Use definitions and supplemental regulations.~~

[all use definitions and their supplemental regulations are being deleted]

ARTICLES 5 THROUGH ARTICLE 8

In addition to the specific changes to Articles 5 through 8 identified on the following pages, the following general changes are being made throughout these articles:

- *Every occurrence of the acronym "NBOZ" is being changed to "C-NB district"*
- *Every occurrence of the phrase "conditional use" is being changed to "special exception"*
- *Every occurrence of the word "overlay" or the phrase "overlay zone" is being changed to "C-NB district"*

Article 5 Architectural Elements

No additional changes are being made to Article 5.

Article 6 ~~Landscape Elements~~ Reserved

Article 7 Signage and Outdoor Displays

The row in Table 7-6 that applies to the Central/West District is being deleted.

ARTICLE 8 SITE PLAN ELEMENTS

Sec. 8-2 Building orientation and placement.

* * *

D. Building envelope, bulk and setback requirement. In order to establish overall building envelope, bulk, and setback provisions within the C-NB~~OZ~~ district, the following regulations are established for the purposes of this section.

Table 8-2 --- Proposed Setbacks

[delete columns headed West, Central and Marine]

Sec. 8-4 Pedestrian amenities.

A. ***General design***. Uses shall contribute to pedestrian-friendly focal spaces through the provision of aesthetic walking paths, pedestrian spaces with furnishings, public art, generous plantings, marked crosswalks, and vehicular parking and circulation areas clearly separated from such pedestrian amenities.

1. Sidewalks shall be of barrier-free design to the greatest extent possible.
2. Pedestrian circulation systems shall include gathering/sitting areas.

Pedestrian Amenities

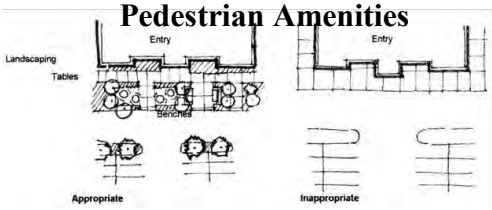

B. ***Width and materials.*** Sidewalks shall be a minimum of five (5) feet in width and shall be constructed of stone, textured cement, concrete pavers, or brick.

C. ***Pedestrian entrances***.

1. Major public entrances shall be located along Northlake Blvd.
2. A clearly designated pedestrian walkway and similar pedestrian-oriented facilities shall be provided from public sidewalks to public entrance or walkways within a commercial site, as well as between abutting commercial properties.

D. ***Pedestrian walkway to Earman River (C-17 Canal).*** A clearly designated pedestrian walkway shall be provided from public sidewalks to the rear lot line on all properties located between US Highway 1 and a point 200 feet east of the centerline of Southwind Drive. This requirement shall not apply if the location of existing buildings make it impractical.

ARTICLE VIII. - LANDSCAPING

Sec. 45-81. ~~6-1.~~ - Intent.

A. ***Purpose and intent.*** The provisions of this section are intended to ensure that properties within the ~~NBOZ~~ Village meet minimum landscaping standards in order to:

1 Improve and sustain the aesthetic appearance of the village through creative landscaping which helps to harmonize and enhance the natural and built environment.

2. Promote water conservation by encouraging ~~xeriscaping~~ Florida-friendly landscape principles ~~and utilization of native and drought tolerant landscape material~~ and utilization of water conserving irrigation practices;

3. Provide a visual buffer between otherwise incompatible types of land uses and adjacent rights-of-way~~s~~.

4. Encourage innovative and cost-effective approaches to the design, installation, and maintenance of landscaping.

B. ***Landscape principles.*** The Village promotes Florida-friendly landscaping as defined in F.S. § 373.185 and requires that installed landscapes be designed and maintained with full consideration of the following principles:

1. Specify the right plant in the right place by selecting pest-resistant plants that match the sites soil, light, water, and climate conditions, with an aim for a diversity of trees, shrubs, groundcover, and flowers.

2. Design for more efficient irrigation by grouping plants with similar watering needs together and zoning the irrigation system accordingly.

3. Select sustainably harvested mulch for landscape beds and around tree trunks.

4. Use proper maintenance practices, including fertilizing appropriately to prevent pollution and maximize plant health and spot-treating pests with selective spectrum pesticides.

Sec. 45-82. ~~6-2.~~ - Administration.

A. ***Applicability.*** The provisions of this article shall apply to all existing and future development within the ~~boundaries of the NBOZ~~ village as follows:

1. ***New development.*** All new development.

2. ***Existing development.*** All existing multifamily, mixed-use, commercial, and industrial development shall conform with the provisions of the article ~~by May 31, 2014.~~ if requesting any of the following types of changes to existing development or to a previously approved development plan:

a. Increase in the total square footage of any building by more than twenty (20) percent;
b. Increase in the number of structures; or
c. Increase in the building height of any building.

3. ***Existing development along Northlake Boulevard.*** See section 45-83.

4. ***Exceptions.*** This article does not apply to the construction, renovation, or replacement of single-family or two-family dwellings.

B. ***Exemptions.*** All licensed plant or tree nurseries or tree farms shall be exempt from the terms and provisions of this article, but only with respect to those trees planted and growing which are for sale to the general public in the ordinary course of the business. The landscaping required for buildings and parking lots shall be provided.

C. ***Modifications.*** The Community Development Director may modify a locational requirement for required landscaping if necessary due to site constraints that were discovered after site plan and appearance approval or PUD approval; however, the amount of landscaping that is required may not be reduced.

~~C. *Waiver.* The landscape regulations may be waived in whole or part by the village when a property owner has demonstrated that the requirements contained in this article will reduce required parking, or substantially restrict the operation of the existing business or property's use.~~

D. ***Compliance.*** Failure to install, maintain, or preserve landscaping ~~or native vegetation~~ required in accordance with the terms of this article shall constitute a violation of this article.

1. ***Failure to comply.*** If the property fails to meet the requirements of this article, or if the existing trees, shrubbery, grass, or groundcover are permitted to die, and such materials are not replaced within thirty (30) days of the event, the code enforcement officer shall notify, in writing, the person responsible for the maintenance or replacement of such property of the need to comply with the requirements of this section within thirty (30) days from the date of delivery of the notice.

2. ***Extensions.*** The thirty (30) day rule for compliance may be extended when necessary by the village to recover from acts of nature such as a hurricane or a drought.

3. ***Temporary exemptions.*** Temporary exemptions from compliance of this section may be granted as per the village, if the violation is a direct result of a natural disaster occurrence or drought.

4. ***Relocation or replacement for redevelopment.*** The site plan approved to remedy any violation of this article shall include landscaping and

tree preservation, replacement or relocation to comply with all requirements herein, including ~~. Relocation or replacement shall comply with~~ the standards listed below.

a. Existing trees shall be preserved in place to the best extent practical. Tree preservation shall include measures to protect existing trees from construction encroachment within their driplines.

b. Trees that cannot be preserved in place shall be evaluated by a certified arborist for relocation. If the arborist's assessed condition rating of the tree is greater than 60%, the tree shall be relocated within the project limits or within Village of North Palm Beach public lands.

c. ~~a.~~ Trees having a four (4) ~~three (3)~~ inch or greater caliper at diameter at breast height (DBH) that cannot be preserved in place or relocated ~~which are to be replaced~~ shall be replaced by the sum of three (3) caliper inches to every one (1) inch lost and are of like or similar species. Replacement trees shall be a minimum of three (3) inches in caliper. For example, if an existing five (5)-inch caliper tree is removed from the subject property, fifteen (15)-inches in caliper are required for replacement. A combination of tree sizes may be utilized as long as no tree is less than three (3) inches in caliper.

d. ~~b.~~ If the site cannot support the total number of required replacement trees as determined herein, the village may permit the owner to donate excess trees to the village for planting on public lands at the owner's expense~~; contribute to the village the monies equivalent to such required replacement trees; or permit the required replacement trees to be placed upon other lands owned by the same property owners~~.

~~c. The village may require alternative landscape solutions such as additional aesthetic hardscaping, site amenities, or specimen landscaping as per the intent of this article.~~

Sec. 45-83. ~~6-3.~~ - Landscape areas in the C-NB zoning district. ~~Nonconforming~~

~~A. *Nonconformities established.* All development constructed prior to the effective date of these regulations that do not conform with the provisions of this article shall be considered nonconforming. 1. If nonconforming landscaping is damaged or destroyed by any means to the extent of fifty (50) percent or more of its replacement value at the time of the damage, the replacement landscaping and elements must conform to all of the provisions of this article.~~

~~B. *Maintenance.* Nonconforming landscape areas are not exempt from minimum maintenance standards.~~

~~C. *Amendments to the approved plan.* The following types of amendments to a previously approved development plan shall require the review of the landscape plan for the entire site using the minimum landscape standards in this article:~~

~~1. Increase in the total square footage of any building by more than twenty (20) percent;~~

~~2. Increase in the number of structures; or~~

~~3. Increase in the building height of any building.~~

~~D. *Notice of nonconforming status.*~~ All existing development along Northlake Boulevard was required to conform with the new landscaping regulations by May 31, 2014. On any properties where this requirement has not been met, this requirement remains in effect until compliance has been achieved. ~~Upon the effective date of this article or upon the future annexation of properties, the village shall contact the owners of all properties developed for nonresidential purposes that do not comply with the provisions of this article. The notice shall inform the property owners that the property is being placed in a nonconforming [property] and that the owner of nonconforming property shall have eight (8) years from the date of the nonconforming notice to comply with the requirements set forth in this article. Written notice to the property shall be provided by certified mail.~~

Sec. 45-84. ~~6-4.~~ - ~~Tree and~~ Plant quality, species, and installation.

A. ***Minimum plant quality.*** Plant quality for all required landscaping shall be Florida No. 1 or better, as provided in Grades and Standards for Nursery Plants, Part 1 and Part 2, as amended, as published by the Florida Department of Agriculture and Consumer Services. ~~All vegetation shall be clean and free of noxious pests or disease,~~

B. ~~*Preferred*~~ ***Low-maintenance species*** ~~*list*~~***.*** For required landscaping, 75 percent of trees and shrubs shall be selected from "*Low-Maintenance Landscape Plants for South Florida"* (latest edition published by the University of Florida IFAS Extension office). Low-maintenance plants have low fertilizer requirements, few pest and disease problems, and do not require frequent maintenance. Some low-maintenance species are identified in this publication as native species; certain landscaping requirements in this article include a minimum percentage of these native species. ~~The preferred species list contained in section 4-7 periodically revised, as needed. To the greatest extent possible, the species list shall represent plants that are drought tolerant plants, noninvasive; not destructive to native plants, and strong wooded, non-brittle plants.~~

C. ***Installation.***

1. All landscaping shall be installed with sound workmanship and sound nursery practices in a manner that will encourage vigorous growth.
2. A plant or tree's growth characteristics shall be considered before ~~planning~~ planting to prevent conflicts with views, lighting, utilities, or signage.

~~D.~~ ~~***Root barriers.*** The village shall require root barriers for trees planted within fifteen (15) feet of any road right-of-way, sidewalk, or utility. In determining the appropriateness of particular protection techniques, the village shall use the current edition of the Tree Protection Manual for Builders and Developers, published by the State Division of Forestry, Florida Department of Agriculture and Consumer Services.~~

Exhibit 7 (Landscaping)

~~Sec. 6-5. –New construction and substantial revision.~~

~~A. *Landscape area.* At least fifteen (15) percent of the total parcel area shall be landscaped, excluding any area utilized for required parking.~~

~~B. *Overall landscaping.* The required area to be landscaped may include any of the following~~*: [this material is being relocated to Table 45-87.B]*

~~1. Entry features;~~
~~2. Massing of landscaping to produce focal points;~~
~~3. Foundation plantings;~~
~~4. Trellises, arbors, and similar structures;~~
~~5. Planter and flower boxes;~~
~~6. Freestanding planters and pottery;~~
~~7. Sidewalk plantings;~~
~~8. Landscaped courtyards, loggias, patios, and similar open areas available for public use; and~~
~~9. Materials installed within publicly owned lands.~~

Sec. 45-85. ~~6-6.~~ - Prohibited and ~~standard~~ invasive plants.

~~A. *Prohibited plantings.*~~

A. ~~1.~~ Artificial plants or vegetation may not be used to meet the landscaping requirements of this article. ~~shall be prohibited.~~

B. ~~2.~~ Prohibited plants shall not be planted within the village. ~~NBOZ, and existing prohibited plants shall be removed if determined to be invading adjacent native plant communities.~~ The list of prohibited plant species shall include all species identified as Category 1 invasive species on "*List of Invasive Plant Species*" (latest edition published by the Florida Exotic Pest Plant Council), specifically including the following species: ~~, include, but are not limited to~~ Casuarina spp. (Australian Pine), ~~Ficus bengalensis (Banyan),~~ Schinus terebinthifolius (Brazilian Pepper), Supaniopsis anacardioides (Carrotwood), Acacia auriculiformis (Earleaf Acacia), Pueraria montana (Kudzu), ~~and~~ Melaleuca quinquenervia (Melaleuca/Punk Tree/Pepper Tree), and Schefflera actinophylla (Umbrella Tree).

C. All existing Category 1 invasive species shall be removed from existing development if the thresholds in section 45-82.A.2 are exceeded.

~~B. *Controlled plant species.* The following species may be planted or maintained under controlled conditions and shall not exceed a maximum of ten (10) percent of the total number of required trees.~~

~~1. *Black olives.* Black olives shall not be installed within fifteen (15) feet of any parking area.~~

~~2. *Ficus species*. Ficus species may be planted as individual trees or hedge material provided that individual trees are no closer than thirty (30) feet from any public road right-of-way, utility, or structure. Hedges shall not exceed eight (8) feet in height and be regularly maintained.~~

~~Sec. 6-7. Preferred landscape palette.~~

A. ~~*Preferred trees*. Fifty (50) percent of the required trees shall be selected from the list presented below.~~

~~*Table 6-7A --- Preferred Tree Species*~~

~~*Common Name*~~	~~*Scientific Name*~~
~~1. Cabbage Palm~~	~~Sabal palmetto~~
~~2. Cattley Guava~~	~~Psidium littorale~~
~~3. Dahoon Holly~~	~~Hex Cassine~~
~~4. Ligustrum Tree~~	~~Ligustrum lucidum~~
~~5. Live Oak~~	~~Quercus virginiana~~
~~6. Mahogany~~	~~Swietenia mahogani~~
~~7. Oak~~	~~Quercus spp.~~
~~8. Oleander Tree~~	~~Nerium oleander~~
~~9. Pink Tabebuia~~	~~Tabebuia heterophylla~~
~~10. Pygmy Date Palm~~	~~Phoenix roebellini~~
~~11. Silver Buttonwood~~	~~Conocarpus erectus~~
~~12. Washington Palm~~	~~Washingtonia robusta~~
~~13. Wax Myrtle~~	~~Myrica cerifera~~
~~14. Weeping Bottlebrush~~	~~Callistemon viminalis~~

~~B. *Preferred shrubs and groundcovers*. Fifty (50) percent of the required shrubs and groundcovers shall be selected from the list presented below:~~

~~*Table 6-7B --- Preferred Shrub/Groundcover Species*~~

~~*Common Name*~~	~~*Scientific Name*~~
~~1. Bougainvillea~~	~~Bougainvillea spp.~~
~~2. Cocoplum~~	~~Chrysobalanus icaco~~
~~3. Confederate Jasmine~~	~~Trachelospermum jasminoides~~
~~4. Crinum Lily~~	~~Crinum asiaticum~~
~~5. Croton~~	~~Codiaeum variegatum~~
~~6. Dwarf Oleander~~	~~Nerium oleander 'petite'~~
~~7. Dwarf Philodendron~~	~~Philodendron 'xanadu'~~
~~8. Fakahatchee Grass~~	~~Tripsacum dactyloides~~
~~9. Hibiscus~~	~~Hibiscus spp.~~
~~10. Liriope~~	~~Liriope muscari~~
~~11. Saw Palmetto~~	~~Serenoa repens~~

Sec. 45-86. – Submission requirements for landscaping.

Plans must be submitted that demonstrate compliance with Village landscaping requirements. These plans must be prepared by a landscape architect authorized by chapter 481, *Florida Statutes,* and must contain the following:

A. ***Tree disposition plan***, depicting:
   1. Existing trees, with a unique number assigned to each tree; and
   2. A tree survey table with the following information listed by tree number corresponding to the numbered existing trees on the plan view:
      a. Common and botanical species name
      b. Diameter at breast height (DBH) for all trees 3″ DBH and greater
      c. Clear trunk (CT) height for all palms greater than 6′ CT
      d. Proposed tree disposition (remain/protect, relocate, or remove)

B. ***Landscape plan***, depicting:
   1. Existing plant material to remain;
   2. Existing trees and shrubs and site improvements on abutting properties within 25 feet of the property lines. This information may be obtained from aerial photographs and approximate locations based on field observations;
   3. The location and outline of proposed buildings and site improvements including landscaping, paving, utilities, easements, and rights-of-way;
   4. Existing site improvements to remain including buildings, paving, utilities, easements, and rights-of-way;
   5. Proposed plant materials by botanical and common names and by installation size and spacing; and
   6. Signage locations, including monument signage and wall-mounted building signage.

C. ***Irrigation plan***, containing the following:

1. Technical specifications for the irrigation system, as required by the *Florida Building Code, Plumbing* for preconstruction submittals;
2. Water source (well/pump, canal/pump, reclaimed, potable, etc.) and/or water service connection location and backflow prevention device, as applicable; and
3. Rain and/or moisture-sensing device(s), as required by Florida Statutes 373.62.

Sec. 45-87. ~~6-8.~~ – Criteria for required landscaping. ~~Minimum landscape requirements.~~

A. ***Required landscaped areas.*** The following ~~uses~~ areas are ~~within nonresidential developments shall be~~ required to provide landscaping: ~~, as required herein.~~

1. Miscellaneous landscape elements, as required in section 45-88;
2. ~~1.~~ Off-street parking lots, ~~Vehicular use areas~~ as required in section 45-89 ~~6-8~~;
3. Site perimeters, as required in section 45-90; and
4. ~~2.~~ ~~Building~~ Base of foundation, as required by section 45-91. ~~6-12; and~~

   ~~3. Signs as required by article 7.~~

B. ***Natural form.*** New trees and shrubs should duplicate natural patterns with multiple plant sizes, spacing, plant clusters, and single plantings.

C. ***Size and configuration of plants.*** ~~*Minimum landscape standards.*~~ All required landscape~~ing~~ ~~installed~~ shall meet the minimum standards ~~requirements~~ of Table 45-87-A ~~6-8A~~ and as otherwise provided herein.

Table 45-87-A ~~***6-8A***~~
Minimum Size and Configuration Standards ~~*Landscape Requirements*~~

Plant Material	***Minimum Size at Planting***	***Other*** ~~*Installation*~~ ***Requirements***
Trees	~~12 feet with a minimum crown of 5 feet. (1)~~ All trees: 8 feet tall at planting, with a minimum crown at planting of 3 feet. *(1)* Shade trees: 12 feet tall at planting, with a minimum crown at planting of 5 feet. *(1)*	~~50% of required trees shall be selected from the preferred plant list.~~ 75% of required trees shall be low maintenance. *(5)* 50% of required trees shall be shade trees. 25% of required trees shall be native trees.
Palms	8 feet clear trunk ~~when used for required buffer or parking purposes.~~ *(2, 3)*	3 palms equal~~s~~ 1 required ~~canopy~~ tree. 75% of required palms shall be low maintenance. ***(5)***
Specimen Palms	See list of specimen palms in *(4)* 12 feet clear trunk *(2)*	1 specimen palm shall equal 1 shade tree or 3 palms.
Hedge Shrubs	~~30~~ 24 inches tall	Planted not more than 36 ~~24~~ inches on center. 75% of required shrubs shall be low maintenance. *(5)*
Vines	60-inch trellis length, with 3 or more live runners at planting	Attached to support. *(6)*

Notes:

(1) Height measured from grade to average end of branches, not the tallest of one or two branches ~~and a minimum crown of five (5) feet.~~

(2) Height measured as clear ~~gray~~ trunk (CT) height: from the top of the root ball to the point where the lowest untrimmed leaf's petiole diverges from the trunk.

(3) Palms not classified as specimen palms and planted in perimeter buffer areas shall be installed in groups of not less than three.

(4) Specimen palms: Phoenix canariensis, sylvestris, reclinata, or dactylifera; Bismarkia nobilis; Roystonea spp.; Attelea spp.; and Cocos nucifera (Green Maypan or Green Malayan only)

(5) Low-maintenance and native species are described in section 45-84.

(6) Support shall be provided consistent with sound horticultural practices to encourage future growth.

D. ~~*Minimum*~~ ***Landscape points to exceed minimum standards.*** In addition to meeting all other landscaping requirements, each development parcel must supplement the minimum standards by qualifying for additional landscape points. Points are awarded for landscape material and improvements that exceed the minimum standards, including exceeding the size and volume of required material.

1. Parcels less than 1 acre must exceed the minimum standards by 50 points.
2. Parcels between 1 and 2 acres must exceed the minimum standards by 100 points.
3. Each additional acre or portion thereof requires 50 additional points.

~~Tables 4-8B and 4-8C shall be used to determine the minimum landscape points per open space a project shall be required to provide. Achieving the minimum open space landscape point requirement does not exempt a project from compliance with other requirements of this article.~~

4. ~~E. *Total landscaping points.*~~ Achieving the total points ~~per open space~~ for an entire project ~~within one or more areas~~ does not exempt one from complying with all other requirements, even if that means exceeding the minimum required.
5. If a redevelopment project is unable to meet the point system or open space requirements of this article, required landscape points may be acquired by placing equivalent landscaping on public lands, parks, road rights-of-way, or other similar public space, if acceptable to the village and the entity that manages the land, up to a maximum of fifty (50) percent reduction of required points.

~~*Table 6-8B — Minimum Landscape Requirements for Point System Delineation*~~

~~*% Open Space Provided**~~	~~*Points per 100 Square Feet*~~	~~*% Open Space Provided**~~	~~*Points per 100 Square Feet*~~
~~< 15%~~	~~22~~	~~25—27%~~	~~14~~
~~16%~~	~~21~~	~~28—29%~~	~~13~~
~~17%~~	~~20~~	~~30—32%~~	~~12~~
~~18%~~	~~19~~	~~33—34%~~	~~11~~
~~19%~~	~~18~~	~~35—39%~~	~~10.5~~
~~20%~~	~~17~~	~~40—49%~~	~~9.5~~
~~21—22%~~	~~16~~	~~50—59%~~	~~8~~
~~23—24%~~	~~15~~	~~> 60%~~	~~7~~

~~***Notes***~~

~~*Example: 15% project open space requires 22 points/100 square feet~~

~~< = Equal to or less than > = Equal to or greater than~~

Exhibit 7 (Landscaping)

Table 45-87-B ~~6-8C~~ ~~Required~~ Supplemental Landscape ~~Installation~~ Points	
Category	***Points***
Specimen Trees or Palms (1) *	25 per tree or palm retained or planted ~~additional~~
~~Specimen Plants*~~	~~15 additional~~
~~Specimen Palms*~~	~~25 additional~~
Native Trees (1)– (if >5 Inches DBH)	20 per tree retained or planted, plus 1 point for each inch >5 DBH
~~Trees w/12 foot minimum height (minimum of 50% from Preferred Tree Species list) *(See Note 1)*~~	~~15 plus 1 point for each foot than minimum~~
Low-Maintenance Trees ~~not on Preferred Tree Species list or <~~ ≥ 12 foot minimum height	5 per tree planted
Low-Maintenance Palms ~~from Preferred Tree Species list w/minimum~~ ≥ 8 feet of clear trunk	3.3 per palm planted, ~~points~~ plus 1 point for each foot of clear trunk > 8 feet
Courtyards, loggias, patios, and similar open areas available for public use	50 points
Massing of landscaping including trees, shrubs, groundcover, and flowers to produce focal points	up to 25 points
Trellises, arbors, or flower boxes	up to 25 points
Sidewalks & adjoining landscaping that connect parking lots or alleys to buildings or to public sidewalks	up to 25 points
~~Palms not on Preferred Tree Species List or less than 8 feet of clear trunk~~	~~1~~
~~All Shrubs (minimum of 50% from Preferred Shrub Species list)~~	~~1~~
~~All Groundcover (minimum of 50% from Preferred Groundcover Species list)~~	~~2 points per 10 square feet~~
~~Grass~~	~~.25 (¼) points per 10 square feet~~

Notes

(1) Abused trees, as determined by the village, shall not count toward required points.

** = Justification to be provided consistent with definition below.*

DBH= Diameter at Breast Height. (4-½ feet above grade) < = Less Than. > = Greater Than.

1 **E. *Reserved.***

F. ***Reserved.*** ~~*Water conservation.*~~

~~1. Landscape plans shall be required to use minimum water conservation techniques such as the following:~~

~~a. Moisture-Sensing Controller (other than rainswitch).~~

~~b. Drip/Trickle/Micro Irrigation System.~~

~~c. Quality Effluent Irrigation.~~

~~2. Water conservation may also be obtained through the use of the following:~~

~~a. Florida Native Landscaping.~~

~~b. Very drought-tolerant trees, shrubs and groundcovers.~~

~~c. Native wildflowers, meadow grasses or groundcover in lieu of allowable sodded area.~~

G. ***Specimen trees and palms.*** Specimen trees and palms are either: ~~shall be considered as~~

1. Existing ~~native~~ trees if in good health, ~~and~~ over thirteen (13) inches at diameter at breast height (DBH), and not a Category 1 invasive species on the "List of Invasive Plant Species" (latest edition published by the Florida Exotic Pest Plant Council) ~~or larger~~.
2. A newly planted palm of a species listed in Table 45-87-A.

H. ***Shade*** ~~***canopy***~~ ***trees.***

~~1. Canopy trees shall be installed in the landscape buffer at a maximum of thirty (30) feet on center.~~

1. ~~2. The Canopy~~ Shade trees, at maturity, shall be of a species, which possess an average spread of at least twenty-five (25) feet and a clear trunk of at least six (6) feet.
2. ~~3.~~ The village staff may approve ~~Approval of~~ the use of shade trees with a lesser mature canopy spread, provided that groupings of such species are utilized to achieve the average spread.

I. ***Palm trees.***

1. Palms must attain a minimum twelve (12) feet in height at maturity.
2. Palms must be resistant to lethal yellowing.

J. ***Tree species mix.*** When more than fifteen (15) trees are required to be planted to meet the landscaping standards ~~of this section~~, a mix of species shall be provided according to the overall number of trees required to be planted. Species shall be planted in proportion to the required mix. The minimum number of species to be planted is indicated in Table 45-87-C. ~~6-8D.~~

Table 45-87-C ~~6-8D~~ --- Required Species Mix			
Required Number of Trees	***Min. Number of Species***	***Required Number of Trees***	***Min. Number of Species***
16—20	~~2~~ 3	31—40	4 5
21—30	~~3~~ 4	41 +	~~5~~ 6

K. ***Native ~~and drought-tolerant~~ trees.*** ~~1.~~ A minimum of fifty (50) percent of all trees used to satisfy the standards of this article shall be classified as native species (see section 45-84). ~~2. In addition, fifty (50) percent shall be classified as drought-tolerant by the most recent edition of the South Florida Water Management District's "Xeriscape Plant Guide."~~

L. ***Shrubs and hedges.*** ~~*groundcovers.*~~

1. At least fifty (50) percent of all required hedges and shrubs shall be classified as native species (see section 45-84). ~~drought tolerant by the most recent edition of the South Florida Water Management District's "Xeriscape Plant Guide."~~

2. At the time of installation, required hedges and shrubs shall be a minimum of twenty-four (24) inches in height, or eighteen (18) inches in height for native species, spaced at a maximum of thirty-six (36) ~~twenty-four (24)~~ inches on center.

3. Required hedges shall form a solid, continuous visual screen of at least three (3) feet in height within two (2) years of planting.

4. Hedges used in combination with nonliving landscape barriers to meet the six (6) feet screen requirements in section 45-88 shall be installed at the height necessary to provide the total six (6) foot screen within (2) years of planting.

M. ***Reserved.*** ~~*Sod or grass.* Not more than forty (40) percent of the total landscape area shall be covered with sod or grass.~~

N. ***Ground treatment.***

1. The ground area within required landscaped areas which is not dedicated to trees or palms, or the preservation of existing or new vegetation, shall receive appropriate landscape treatment such as grass, groundcover, mulch, or shrubs and present a finished appearance upon planting.

2. Sand, gravel, shellrock, or pavement shall not be considered appropriate landscape treatment.

3. The following standards shall apply to the design of ground treatment.
   a. ***Plants.*** ~~*Ground cover.*~~ Live material used as ground cover shall provide a minimum of fifty (50) percent coverage immediately

upon planting and one hundred (100) percent coverage within one (1) year.

b. ***Mulch.*** Mulch shall be installed and maintained at a minimum depth of three (3) inches at all times~~,~~ in all planted areas not containing ground cover, except leaving two inches of space around tree trunks to prevent rot.

i) All mulch material shall be seed and weed-free to prevent tree sprouting and regrowth, and shall be sustainably harvested such as melaleuca, pine straw, or eucalyptus.

ii) Mulch shall be temporarily applied to areas not immediately covered by groundcover.

iii) Mulch will be thoroughly wet at the time of application to prevent wind displacement.

c. ***Pebble and egg rock.*** Pebble or egg rock may be used in a limited amount as a ground treatment in areas where drainage is a problem.

d. ***Lawn and turf grass.*** Grass areas shall be planted with species suitable as permanent lawns. Use of drought-tolerant groundcover instead of lawn and turf grass is encouraged.

O. ***Flowers.*** Flower boxes and hanging pots should complement the overall architecture of the facade and not obscure architectural details. The boxes should be well constructed, and accommodate watering needs without allowing water to drip or leak onto the building or sidewalk.

P. ***Reserved.*** ~~*Redevelopment and nonconforming projects.*~~ *[content moved to 45-87.D.5]*

Q. ***Landscape in easements.***

1. Landscaping may be permitted in easements with the written permission of the easement holder. Trees planted within any easement with overhead utilities shall be consistent with FP&L's suggested tree list "Plant the Right Tree in the Right Place," taking into consideration the mature height and spread of the species beneath or adjacent to existing overhead utilities.

2. Easements may overlap a landscape buffer a maximum of five (5) feet provided that there remains a minimum of five (5) clear feet for planting, or if a wall with a continuous footer is used, a minimum of ten (10) clear feet for planting.

3. The landscape buffer may be traversed by easements or access ways as necessary to comply with the standards of this section.

R. ***Perimeter landscaping.*** Only access ways and easements shall be permitted as interruptions in perimeter landscaping and shall be included in the calculation of linear dimension. No structures or parking are to be located in this landscape area.

S. ***Landscaping in public road right-of-way.*** Maintenance of landscaped rights-of-way shall be the responsibility of the project's property owner or, as agreed upon in the development order approving the project, by special districts created for unified maintenance.

Sec. 45-88. ~~6-9.~~ - Miscellaneous landscape elements.

A. ***Alternative landscape materials.*** A landscape plan may utilize one or more materials not specifically authorized in this article and must be demonstrated to be consistent with the purposes and intent of this article.

B. ***Screening required.*** Uses ~~within the overlay zone~~ that shall be required to be screened from public view are identified in this section. ~~include mechanical equipment areas, parking areas, satellite dishes mounted on the ground, chain-link or other non-opaque fence or wall type, accessory use structures, and other elements as defined by this article.~~

C. ***Perimeter walls and fences.***

1. Perimeter walls, metal or wood fences, or other nonliving landscape materials may be used in conjunction with vegetation to meet required screening. ~~landscaping.~~ The heights of walls and fences are limited by section 45-36.
2. Approved walls or fences shall be set back from property lines adjoining streets sufficiently to include landscape on the street side ~~outside~~ of the wall or fence. Chain link fences shall have a green or black vinyl covering.
3. Maintenance of the wall or fence and associated landscaping by the property owner is required.

D. ***Storage and garbage collection sites.*** All outside storage and trash or garbage collection sites shall be completely screened from view, utilizing any approved combination of walls and fences ~~hedge~~ (a minimum of six (6) ~~three (3)~~ feet in height) ~~structural barriers, berms~~ that will fully ~~or any combination thereof to one hundred (100) percent~~ screen the area from view except for gates.

E. ***Service areas.***

1. Service areas of nonresidential buildings, when visible from the street right-of-way or adjacent residential land use, shall have barriers and/or a hedge at a minimum of six (6) feet in height to screen the service

area ~~from this use~~. A hedge that is planted meet this requirement must achieve this height within 2 years of planting.

2. Service areas may include interior or exterior work bays associated with full service gas stations, tire repair, auto repair business, as well as any business proposing loading or unloading docks.

F. ***Backflow preventers.*** Backflow preventer systems shall be screened from public view, utilizing any combination of trees, palms, hedges, or other barriers.

G. ***Reserved.*** ~~*Mulch.*~~ *[mulch standards relocated to 45-87.N.3]*

H. ***Pavers and other impervious surfaces.*** The use of concrete, asphalt, impervious pavers, or similar ~~impervious~~ material, excluding sidewalks, shall not exceed thirty (30) percent coverage of an open space area, and shall not be wider than twelve (12) feet if used in a required landscape buffer area. This limitation shall be increased to sixty (60) percent for pervious concrete, pervious asphalt, and pavers set on a pervious base.

~~I. ***Signs.*** Landscaping around ground/monument signs is required and shall be provided pursuant to article 7.~~

I. ~~2.~~ ***Landscape area around signs.*** *[relocated from subsection 45-89.H.2]*

1. ~~a.~~ A three (3) foot wide planting area shall be required around the base of all signs except signs that are mounted on buildings.
2. ~~b.~~ One (1) shrub for each ten (10) square feet of sign surface area shall be installed within the three (3) foot planting area at the base of the sign.
3. ~~c.~~ Ground/monument signs may be surrounded by ground cover instead of shrubs.
4. ~~d.~~ Landscaping and trees which interfere with signage may be relocated to the rear of the sign planting area.

J. ***Advertising.*** At no time shall a landscaped area be used for advertising display or sales. Temporary signs may not be placed in landscaped areas.

K. ***Earth berms.*** Earth berms shall use long and gentle slopes and as non-living landscape barriers only when installed in conjunction with plant materials.

1. Berms five (5) feet or less in height shall have a maximum slope of 2:1. Berms greater than five (5) feet in height shall not exceed a ratio of 3:1 in slope.
2. Hedges used in combination with earth berms to meet the six (6) foot screen requirements in section 45-88 shall be installed at the height necessary to provide the total six (6) foot screen at time of planting.

Sec. 45-89. ~~6-10.~~ - Landscape requirements for off-street parking lots. ~~areas.~~

A. ***Landscape buffer.*** A landscape buffer, at least five (5) feet in width, shall be provided along all sides of parking lots, excluding a side or sides that abut a building. This buffer strip shall be planted with shade trees at a maximum spacing of thirty (30) feet on center and with a continuous hedge that will be maintained at least three (3) feet high.

B ~~A~~. ***Minimum spacing of shade trees.***

1. The minimum shade tree spacing for ~~interior~~ parking lots ~~areas~~ shall be such that the center of any parking space is not more than thirty (30) ~~forty (40)~~ feet from the center of a ~~the~~ shade tree.

~~2. A shade tree may be replaced by a minimum of three (3) palms clustered together, as long as the affected parking bays are more than fifty (50) feet from a public street.~~

C ~~B~~. ***Landscape islands.***

1. ***Interior islands.*** An interior landscape island shall be required ~~for every~~ wherever nine (9) or more parking spaces are located in a row.
   a. Interior islands shall be spaced a maximum of ninety (90) feet apart.
   b. Interior islands shall measure at least (15) feet in length and eight (8) feet in width, measured from back of curb to back of curb.
   c. A minimum of one (1) shade tree shall be planted in each interior island, in addition to shrubs and mulch or ground cover.

2. ***Terminal islands.*** Each row of parking spaces shall be terminated by landscape islands.
   a. Terminal islands shall measure at least (15) feet in length and eight (8) feet in width, measured from back of curb to back of curb.
   b. A minimum of one (1) shade tree shall be planted in each terminal island, in addition to shrubs and mulch or ground cover.

3. ~~2.~~ ***Landscape diamonds.*** ~~The use of~~ Landscape diamonds may be substituted for interior landscape islands ~~parking lot tree planting is permitted as per this section~~ for parcels less than 1 acre, but not for terminal ~~excluding~~ islands at the end of parking rows.
   a. ~~I. *Landscape diamonds.* 1.~~ On these small parcels, landscape diamonds may be distributed throughout the interior of an off-

street parking lot ~~area~~ to provide shading of parked motor vehicles as an alternative to interior landscape islands.

b. ~~2.~~ Landscape diamonds ~~Tree planting areas~~ shall be located only at the common intersection of four (4) parking spaces and spaced no greater than four (4) spaces apart.

c. ~~3.~~ The ground within the diamond ~~tree planting area~~ shall receive appropriate landscape treatment, including shrubs and mulch or groundcover.

d. ~~4.~~ The minimum diamond size ~~tree planting area~~ shall be twenty-five (25) square feet and the minimum dimension shall be five (5) feet by five (5) feet, not including curb treatment.

e. A minimum of one (1) tree shall be planted in each diamond, ~~3. Each planter island shall contain at least one canopy tree for each one hundred (100) square feet of area or fraction thereof,~~ in addition to shrubs and mulch or ground cover.

~~4. *Terminal and landscape islands.* Each row of parking spaces shall be terminated by landscape islands, which measure a minimum of eight (8) feet in width, excluding required curbing, and fifteen (15) feet in length. A minimum of one hundred twenty (120) square feet of pervious surface areas shall be provided. A minimum of one (1) tree shall be planted in each terminal island.~~

~~5. *Interior landscape islands.* A minimum of one (1) interior landscape island shall be provided for every nine (9) parking spaces or fraction thereof and shall be spaced a maximum of ninety (90) feet apart. Interior islands shall measure not less than eight (8) feet in width, excluding required curbing, and fifteen (15) feet in length. A minimum of one hundred twenty (120) square feet of pervious surface areas shall be provided. A minimum of one (1) tree shall be planted in each interior island.~~

~~6. *Lots equal to or less than one (1) acre.* For lots equal to or less than one (1) acre, terminal and interior landscape islands shall be a minimum of five (5) feet in width, excluding required curbing, and fifteen (15) feet in length.~~

~~C. *Divider median.*~~

~~1. Divider medians shall be installed between rows of parking and between all parking/vehicular use areas.~~

~~2. One (1) tree shall be planted for each thirty (30) linear feet of a divider median, or fraction thereof.~~

~~3. The minimum width shall be five (5) feet of un-encroached landscape area.~~

~~D. *Minimum size for landscape areas.*~~

~~1. The minimum landscape area shall contain no dimension less than five (5) feet in width, measured from the inside of the curb.~~

~~2. There shall be no landscape area smaller than twenty-five (25) square feet.~~

~~3. Landscape areas within interior parking areas may be reduced if the areas shall constitute an obstruction in use of a building structure, providing the reduced square footage is relocated so as to emphasize entrance corridors or special landscaped areas within the general parking area.~~

D. ~~E.~~ ***Protection of landscape areas.*** All landscape areas shall be protected by curbs or wheel stops from vehicular encroachment and from the damages caused by vehicles overhanging into landscape areas.

1. ***Landscaping.*** ~~In addition to grass,~~ Landscaping shall be required to be at least twenty four (24) ~~thirty (30)~~ inches from the edge of the wheel stop or curbing.

~~2. *Overhang areas.* Vehicle parking areas designed to permit vehicles overhanging into landscaped areas shall not be permitted to count the first thirty (30) inches of landscape area as open space.~~

2~~3~~. ***Curbing.*** All landscape areas subject to vehicular encroachment shall be separated from vehicular use areas by six (6) inch, non-mountable, FDOT-type 'D' or FDOT-type 'F', concrete or asphalt curbing. The curbing shall be machine-laid, formed-in-place or integral with the pavement. Curbing may be interrupted to accommodate drainage, paths, or sidewalks.

3~~4~~. ***Wheel stops.***

a. Wheel stops shall have a minimum height of four (4) ~~six (6) inches~~ above finished grade of the parking lot ~~area~~, shall be properly anchored, and continuously maintained in good condition.

b. The space between the wheel stop and the end of the parking space may be paved as required by the building division for anchoring and maintenance purposes.

c. Wheel stop anchor rods shall be set through the pavement and the bottom of the wheel stop must rest fully on the pavement to prevent rocking.

~~F.~~ ~~*Hedges.*~~

~~1.~~ ~~All parking, loading, or storage areas adjacent to the right-of-way, including driveways to parking lots, shall include a continuous hedge that is maintained at a minimum of three (3) feet at maturity.~~

~~2.~~ ~~"Dwarf" hedges may be installed and maintained at a minimum height of eighteen (18) inches when adjacent to an automobile sales display area.~~

~~G.~~ ~~*Maintenance.* Regular maintenance of vehicular use areas adjacent to all landscape areas shall include replacement of broken curbs or curb stops as needed to keep the general appearance in good condition and safe.~~

~~H.~~ ~~*Safe sight distance triangles.*~~ *[moved to subsection 45-90.C]*

~~2. *Landscape area around signs.*~~ *[moved to subsection 45-88.I]*

Sec. 45-90. ~~6-11.~~ – Landscape requirements for site perimeters. ~~Minimum landscape buffer and planting requirements.~~

A. ***Minimum buffer width for site perimeters.*** ~~*required.*~~ A landscape buffer of the widths specified in Table 45-90 shall be provided ~~a minimum of eight (8) feet in width~~ around the perimeter of all parcels in the specified zoning districts.

Table 45-90 – Minimum Buffer Widths			
	Front Yard	***Side Yard***	***Rear Yard***
R-3	8 feet	5 feet [1]	5 feet
C-MU	5 feet [2]	–	5 feet
C-2	8 feet	10 feet	5 feet [3]
C-3	5 feet [2]	–	5 feet [4]
C-NB	5 feet	–	5 feet
All other commercial	5 feet	5 feet [5]	5 feet
I-1	see section 45-38		

NOTES:

[1] Only required in side yards that adjoin R-1 or R-2 districts

[2] Does not apply to all building frontage types; along US Highway 1 and Northlake Boulevard, the front yard landscape buffer may not be planted on a sidewalk easement (see subsections 45-31.E.6 and 45-34.1.H)

[3] Not required on parcels that adjoin the railroad right-of-way

[4] Only required on parcels that adjoin US Highway 1 or Northlake Boulevard (see subsection 45-34.1.H)

[5] Only required in side yards that adjoin less intense zoning districts (e.g. any residential district)

~~However, additional buffer width shall be provided as indicated below:~~

~~1. A minimum landscape buffer of ten (10) feet in width shall be required on lands located adjacent to public rights-of-ways that are one hundred ten (110) feet wide or less;~~

~~2. A minimum landscape buffer of at least fifteen (15) feet in width shall be required on lands located adjacent to public rights-of-ways that are one hundred eleven (111) to one hundred fifty (150) feet wide;~~

~~3. A minimum landscape buffer of at least twenty (20) feet in width shall be required on lands located adjacent to public rights-of-ways that are greater than one hundred fifty (150) feet wide; and~~

~~4. A landscape buffer, at least five (5) feet in width, shall be provided along all sides of the parking lot, excluding that side or sides, which abut a building.~~ *[relocated to subsection 45-90.E]*

~~B. *Mature height.* Vegetation should be planted taking into consideration the mature height and spread of the species.~~

~~C. *Spacing.* The maximum spacing of planting trees shall be thirty (30) feet on center along any perimeter buffer.~~

B. ~~D. *Perimeter*~~ ***Landscape requirements for site perimeters.*** Perimeter landscape buffers shall be installed where required by Table 45-90 ~~and maintained~~ in accordance with the following standards. Vegetation should be planted taking into consideration the mature height and spread of the species. Easements and access ways, which traverse required perimeter landscape buffers, shall be included in the calculation of linear dimension.

1. ***Trees.*** Trees shall be planted in required perimeter landscape buffers at a maximum spacing of thirty (30) feet on center.

2. ***Shrubs***. A hedge shall be planted in required perimeter landscape buffers to form a continuous solid opaque visual screen of at least thirty-six (36) inches in height within two (2) years of planting.

3. ~~1.~~ ***Palm Trees.***

a. Within the perimeter landscape buffer, a specimen palm or a group of three (3) palm trees may be substituted for one (1) required ~~canopy~~ tree; however, not more than fifty (50) percent of the required ~~canopy~~ trees may be replaced by palm trees.

~~b. In right-of-way buffers only, Royal or Phoenix palms, excluding Phoenix roebellini, may be counted as one (1) required canopy tree. These palms shall:~~

~~1) Not exceed a maximum of thirty (30) percent of all trees required in the buffer;~~

~~2) Be spaced a maximum of twenty (20) feet on center; and~~

~~3) Be a minimum of either six (6) feet of gray wood for Royal palms or eight (8) feet clear trunk for Phoenix palms.~~

4. ~~2.~~ ***Slash pines.***

a. Slash pines planted in perimeter buffers shall be installed in groups of no less than three (3).

b. Each group of slash pines shall average a minimum of ten (10) feet in height and may be counted as one (1) required ~~canopy~~ tree.

~~3.~~ ~~***Hedges and shrubs.***~~

~~a.~~ ~~At the time of installation, required hedges and shrubs shall be a minimum of twenty-four (24) inches in height, and spaced at a maximum of twenty-four (24) inches on center.~~

~~b.~~ ~~Required hedges shall form a continuous solid opaque visual screen of at least thirty-six (36) inches in height within two (2) years of planting.~~

5. ~~4.~~ ~~***Canopy***~~ ***Tree and palm clustering.***

a. ~~Canopy~~ Trees and palms may be clustered in right-of-way buffers if the clusters are spaced a maximum of sixty (60) ~~thirty (30)~~ feet apart, and/or consist of trees of varied height, which when averaged, equal the minimum tree height requirements, and are located on property containing a minimum of three hundred (300) linear feet along the right-of-way.

6. ~~5.~~ ***Walls and fences within right-of-way buffer.***

a. If a wall or fence is used, the required landscaping shall be located between the wall or fence and the right-of-way.

b. Walls and fences shall not encroach upon easements, unless approved in writing by the easement holder.

c. Wall or fences shall be setback a minimum of ten (10) feet from the edge of the ultimate right-of-way unless a wall with a continuous footer is used, then the wall shall be setback to provide a minimum of ten (10) clear feet for planting.

C. ~~H.~~ ***Safe sight distance triangles.***

[relocated from section 45-89.H and modified as indicated]

Safe sight distance triangles may be required ~~shall be provided~~ in accordance with the County Design Manual, published by the Palm Beach County Department of Engineering and Public Works, to restrict placement of visual obstructions~~. 1. *Landscape limitations.* a. Safe sight distance triangle areas shall be maintained to provide unobstructed visibility at a level between thirty (30) inches and eight (8) feet above the crown of the adjacent roadway and in a way that does not~~ that might create a traffic hazard. ~~b.~~ Landscaping on state roads shall be installed in accordance with requirements ~~the roadside clear zone provisions~~ of the State of Florida Department of Transportation'~~s Manual of Uniform Minimum Standards for Design, Construction, and Maintenance of Streets and Highways, as amended~~. ~~c. All landscaping within the safe sight distance triangle area shall be planted and perpetually maintained by the property owner, in accordance with this section.~~

Sec. 45-91. ~~6-12.~~ – Landscape requirements for base of foundation. ~~landscaping and plantings.~~

A. ***Location and width.***

1. There shall be foundation landscaping within five (5) feet of all buildings and structures. ~~and~~
   a. These landscape areas shall be provided along all four (4) facades of all ~~commercial~~ structures, excluding rear service areas not visible by a public road right-of-way or not generally traveled by the public or visible from adjacent structures.
   b. ~~2.~~ The combined length of the required foundation planting shall be no less than forty (40) percent of the total length of the applicable side of the structure.
2. This requirement shall not apply in the C-MU and C-3 zoning districts in front of buildings that meet the standards for a gallery, storefront, or canopy building frontage type.

~~B. *Irrigation.* All foundation areas shall be irrigated and of the appropriate size to accommodate the mature size of the vegetation to be planted.~~

B. ~~C.~~ ***Minimum standards.***

1. ~~The minimum standards for~~ When required, foundation landscaping shall ~~be determined by the building height and function, and~~ always extend along the portions of a facade that directly abut a street, a parking lot, and other ~~area or~~ vehicular use areas, excluding ~~entryways,~~ doorways ~~or other building improvements~~.

~~1. The foundation planting area for a one-story building shall be at least five (5) feet wide, unless foundation landscaping would interfere with the intended use and function of a building.~~

~~2. The foundation planting area for a building of two (2) or more stories shall be not less than thirty (30) percent of the height of the adjacent wall.~~

~~3. At least one shade tree or palm cluster shall be installed for each thirty (30) linear feet, or fraction thereof, of facade width.~~

2. ~~a.~~ A minimum of one (1) tree ~~per facade~~ shall be planted for each seventy-five (75) linear feet of building perimeter, using a species suitable for this location. ~~and~~ The remainder of the landscape area shall be treated appropriately with plantings which may include shrubs, vines, flower boxes, ground cover, and mulch, and with pedestrian accessways.

   ~~b. Trees and palms shall be of an installed size relating to the height of the adjacent wall or facade, as indicated in Table 6-12.~~

~~*Table 6-12 Minimum Foundation Planting Dimensions*~~		
~~*Wall Height*~~	~~*Min. Tree Height*~~	~~*Min. Palm Height*~~
~~<15 feet~~	~~12 feet~~	~~12—14 feet~~
~~15—25 feet~~	~~14 feet~~	~~14—18 feet~~
~~>25—35 feet~~	~~16 feet~~	~~18—22 feet~~
~~>35 feet~~	~~18 feet~~	~~22—28 feet~~

Sec. 45-92. ~~6-13.~~ - Landscape maintenance.

A. ***Minimum requirements.*** The land owner shall be responsible for the following:

1. The maintenance of required landscape structures (e.g., walls, fences) in a structurally-sound condition.

2. Tree maintenance, which shall be limited to periodic trimming to maintain healthy trees, removal of diseased limbs, or removal of limbs or foliage that present a hazard. ~~a.~~ All trees shall be allowed to grow to their natural mature height and a full canopy.

   ~~b. Large and medium canopy trees shall be required to attain a minimum twenty (20)-foot canopy spread prior to pruning. In no case shall the canopy spread be reduced to less than twenty (20) feet in width.~~

3. Landscape buffers shall be maintained and preserved along the entire length of the property.

4. All landscape areas, including any right-of-way landscaping between the property line and the adjacent street, ~~which~~ shall be maintained on a regular basis, to include weeding, watering, fertilizing, pruning, mowing, edging, mulching, replacement of dead or missing landscaping, removal of prohibited plants, and other horticultural practices that are needed to keep landscaping in good condition, free from disease, insect pests, weeds, refuse, and debris.

5. Landscape maintenance shall be carried out in a manner that will not disrupt, inconvenience, or endanger any member of the public, or pedestrian, or motor vehicles.

Sec. 45-93. ~~6-14.~~ - Irrigation.

A. ***General.*** All landscape areas, except those areas composed of existing native plant communities, shall provide an irrigation system ~~plan~~. The irrigation system shall be designed and installed in accordance with the Florida Building Code. ~~Florida Irrigation Society Standards and Specifications for Turf and Landscape Irrigation Systems, as amended from time to time.~~ Irrigation systems shall be designed and maintained to obtain the following results:

1. Eliminate the wasteful use of water;
2. Eliminate overspray onto ~~staining of~~ buildings, walks, and walls ~~and other site improvements including landscaping~~;
3. Provide a minimum of one hundred (100) percent coverage, including the capability of applying water onto turf areas on a different saturation level than that used to irrigate shrub-planting beds; and
4. Use separate zones to match irrigation to vegetation types. ~~Eliminate water overthrow onto non-pervious areas.~~

B. ***Standards.*** Irrigation systems shall comply with the following standards.

1. Irrigation systems shall be continuously maintained in working order and shall be designed so as not to overlap water zones or to water impervious areas.
2. Irrigation systems shall not be installed or maintained abutting any public street which causes water from the system to spray onto the roadway or to strike passing pedestrian or vehicular traffic, where feasible.

C. ***Rain sensors.*** A rain sensor, to switch off irrigation during wet periods, shall be required on all new irrigation systems.

Sec. 45-94. ~~6-15.~~ - Pruning.

A. ***Crown reduction.***

1. *[relocated from 45-94.A.2.a]* The crown of a shade tree required by this code or condition of approval shall not be reduced below the minimum mature spread or height requirements of this code ~~section~~ or specific village conditions of approval. ~~Crown reduction of shade trees shall be prohibited until the tree canopy has reached at least twenty (20) feet in diameter~~. Exceptions include:
   a. The removal of limbs or foliage presenting a hazard or in conflict with a crime prevention program;
   b. Removal of dead or diseased limbs;
   c. The reinforcement strength of form, or
   d. In association with tree or palm relocation work.

2. ~~After a tree canopy reaches fifteen (15) feet in diameter, crown reduction shall only be permitted as~~ Incidental ~~when correct~~ pruning is permitted ~~standards are used and~~ when there are conflicts with ~~constraints such as, but not limited to,~~ views, power lines, structures, lighting, ~~or~~ signage, vehicles, pedestrians, etc. and to improve the structural integrity of trees. All pruning shall be in accordance with pruning standards in ANSI A300. ~~3.~~ A maximum of one-fourth (0.25) of tree canopy may be removed from a tree within a one (1) year period, provided that the removal conforms to the standards of crown reduction, crown cleaning, crown thinning, crown raising, vista pruning, and crown restoration pruning techniques.
   ~~a.~~ *[relocated to 45-94.A.1]*
   ~~b.~~ A tree that is pruned in excess of these requirements shall be replaced with a tree that meets the minimum requirements of this section or equal specifications of the tree that has been pruned, whichever is greater, or, if deemed possible by a certified arborist, a remedy plan may be proposed to the village that would correct the pruning error.

B. ***Plant characteristics.*** Unless otherwise approved by the village during the approval process, trees shall be allowed to grow to a shape and size typical of their species throughout their life cycle.

C. ***Pruning standards.*** The following are general pruning standards and requirements ~~established for the overlay zone~~.
   1. ***Hat-racking.*** Hat-racking is prohibited. For the purposes of this article, hat-racking is defined as flat-cutting the top or sides of a tree, severing the leader or leaders; making internodal cuts (cutting back of limbs to a point between branch collars/buds) prune a tree by stubbing off mature wood larger than one (1) inch in diameter within the tree's crown; or reducing a mature tree's total circumference or canopy spread by one third or more.
   2. ***Palm trees.*** Pruning palm trees shall be limited to dead fronds and up to one-third (1/3) of the green fronds and seed pods.
   3. ***Maximum limb pruning.*** Severely cutting back lower branches to increase sight visibility from underneath a tree's canopy, shall not exceed thirteen feet six inches (13'-6") from the ground level to the collar of the first limb.

D. ***Alternative canopy shapes.*** If other than the normal expected tree canopy shade and size is desired by the owner of the trees, the desired shape and size shall be indicated on the approved landscape plan. If a desired shape and size is not noted on the approved landscape plan, trees shall be allowed to grow to their natural shape and size.

E. ***Performance.*** Pruning shall be performed by a certified arborist or FNGLA certified landscape contractor in accordance with the Tree Care Industry standard of care as described in ANSI A300. ~~person or tree service that is knowledgeable with the latest standards of the National Arborist Association.~~

F. ***Exemptions.*** Subsections 45-94.A–D do not apply to ~~The following shall be exempt from this section.~~

~~1.~~ trees which interfere with safe site triangles, utility lines, or utility structures.

~~2. Trees having crown die-back or decay greater than one third the tree canopy.~~

~~3. Trees having suffered damage due to natural or accidental causes.~~

~~4. Trees having insect or disease damage greater than one-third of the tree crown.~~

Secs. 45-95 – 45-100. - Reserved.